US005575117A

United States Patent [19]

Soltis et al.

[11] **Patent Number: 5,575,117**

[45] **Date of Patent: Nov. 19, 1996**

[54] **BREAK-IN RESISTANT WOOD PANEL DOOR**

[75] Inventors: **Lawrence A. Soltis**, Mt. Horeb; **Robert J. Ross**, Madison, both of Wis.; **William W. von Segen**, Portland, Oreg.

[73] Assignee: **The United States of America as represented by the Secretary of Agriculture**, Washington, D.C.

[21] Appl. No.: **576,998**

[22] Filed: **Dec. 26, 1995**

Related U.S. Application Data

[63] Continuation-in-part of Ser. No. 204,114, Mar. 1, 1994, Pat. No. 5,501,054.

[51] **Int. Cl.**[6] **E06B 1/04**

[52] **U.S. Cl.** **49/460**; 49/503; 49/504; 52/514; 292/346

[58] **Field of Search** ..... 49/462, 460, 503, 49/504, 501; 52/514, DIG. 7; 292/346; 70/418, 416

[56] **References Cited**

U.S. PATENT DOCUMENTS

3,894,357	7/1975	Stanfield .	
3,918,207	11/1975	Aliotta	49/462
4,080,764	3/1978	Stowik et al. .	
4,120,749	10/1978	Humphrey .	
4,180,944	1/1980	Stowik et al. .	
4,271,649	6/1981	Belanger	49/503 X
4,432,179	2/1984	Bachmann .	
4,483,267	11/1984	Seemann, III .	
4,770,452	9/1988	Petree, Jr.	49/504 X
4,832,388	5/1989	Lozano .	
4,854,622	8/1989	Lozano .	
4,858,384	8/1989	Blankenship	49/460
4,995,213	2/1991	Bezubic .	
5,072,547	12/1991	DiFazio .	
5,076,626	12/1991	Tiddy et al.	49/460 X
5,154,461	10/1992	Prescott et al.	49/503 X
5,326,410	7/1994	Boyles	52/514 X
5,406,768	4/1995	Giuseppe et al. .	

Primary Examiner—Philip C. Kannan
Attorney, Agent, or Firm—Janet I. Stockhausen; M. Howard Silverstein; John D. Fado

[57] **ABSTRACT**

A wooden panel door reinforced against attempted break-in contains layers of fiberglass mat and decorative wooden facing strip bonded to the doorjamb and stiles. The stiles and doorjamb are constructed from wood with grain that runs primarily in a single direction, and reinforcing these stiles and doorjambs against impact can be achieved by bonding to them a fiberglass mat, which contains fibers running in transverse directions. The fiberglass mat is in turn covered by a decorative wooden facing strip layer.

11 Claims, 2 Drawing Sheets

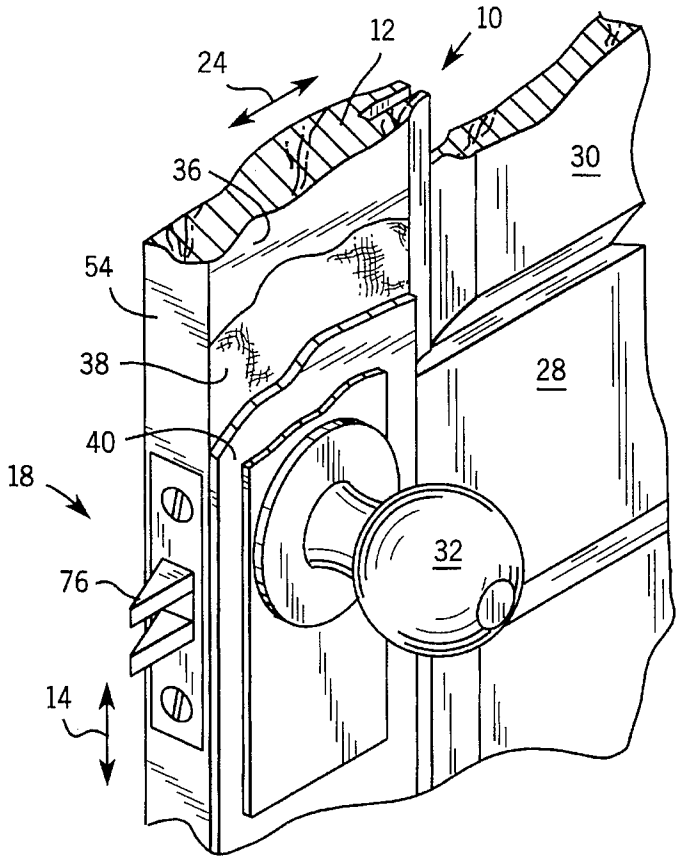

FIG. 1

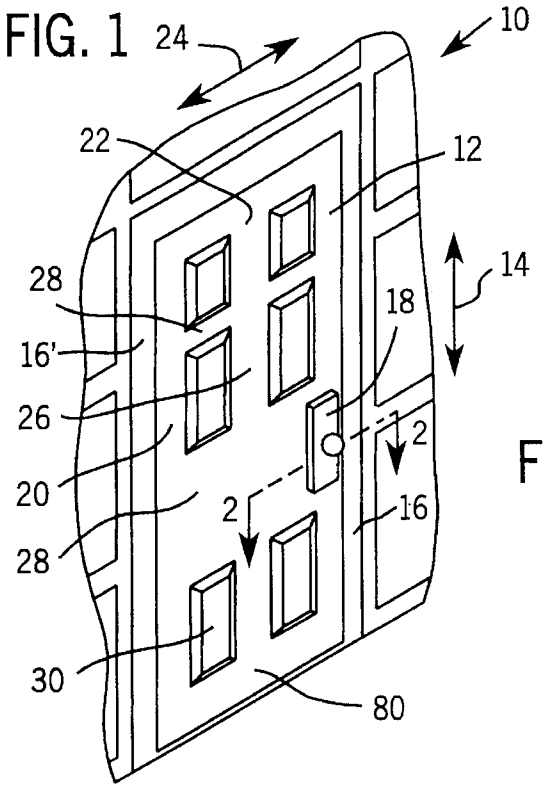

FIG. 2

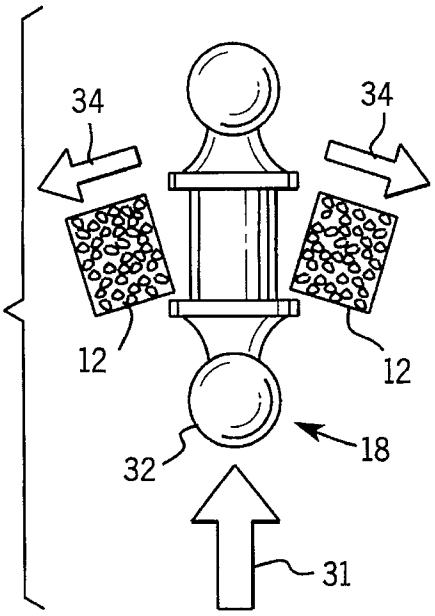

FIG. 3

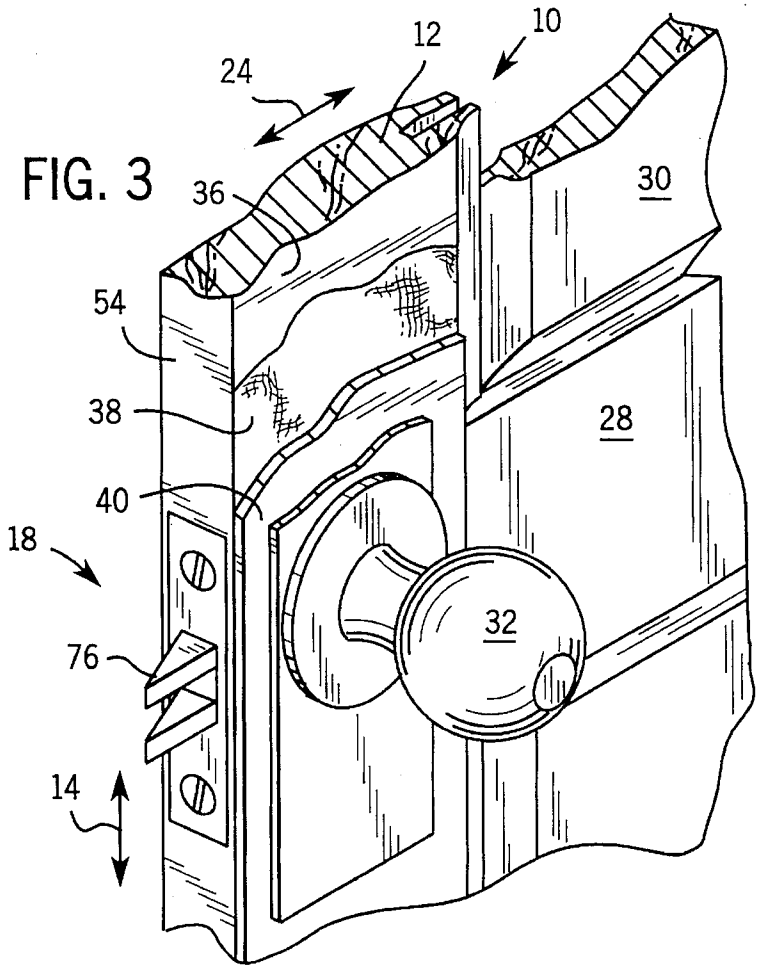

FIG. 4

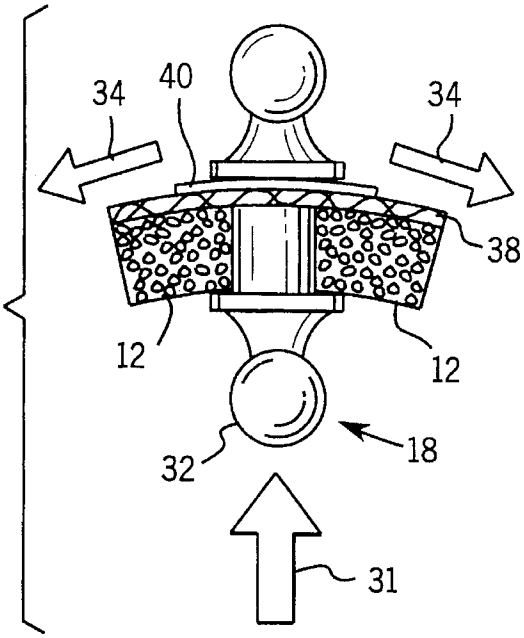

FIG. 5

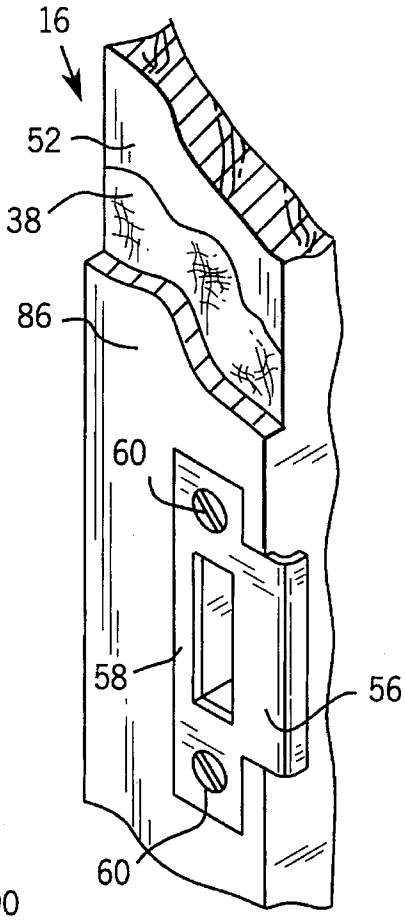

FIG. 6

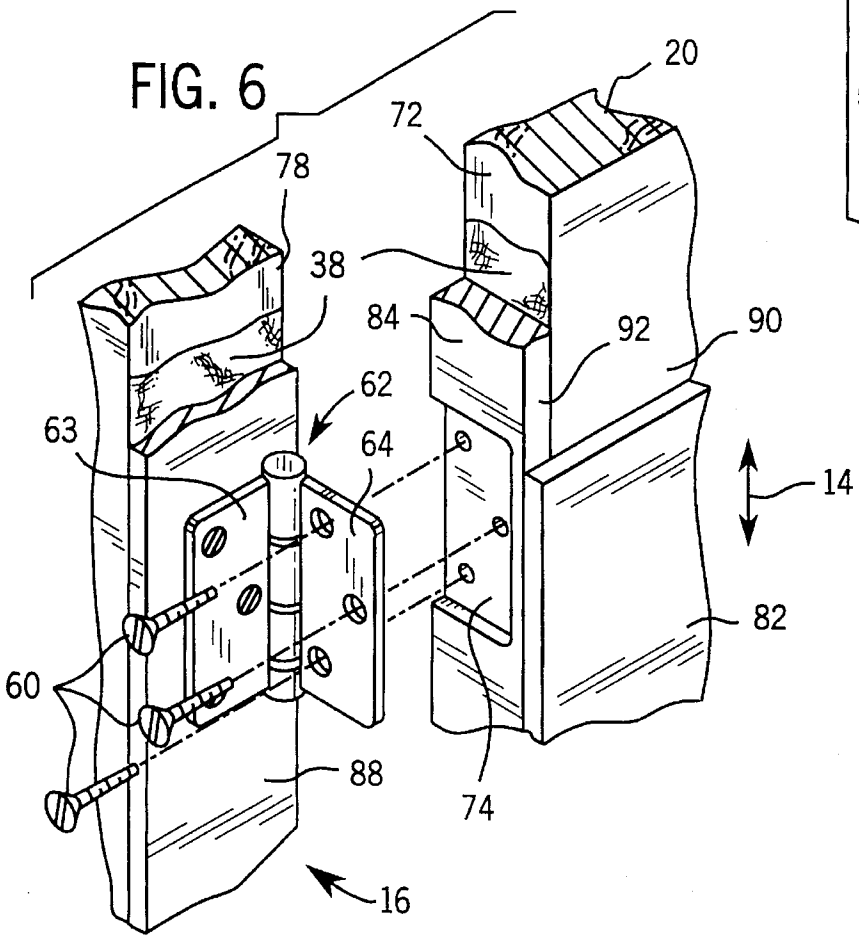

BREAK-IN RESISTANT WOOD PANEL DOOR

This application is a continuation-in-part of U.S. application Ser. No. 08/204,114 filed Mar. 1, 1994 now U.S. Pat. No. 5,501,054.

FIELD OF THE INVENTION

The invention relates generally to wooden doors, and in particular to wooden panel doors having wooden stiles and rails framing one or more panels.

BACKGROUND OF THE INVENTION

The wooden panel door derives its name from the fact that it is constructed of separate panels held between vertical stiles and horizontal rails. The stiles and rails are generally milled separately and assembled about the panels to produce a sturdy but elegant door amenable to a variety of finishes including those in which the natural wood is exposed. The use of wood provides good thermal insulation and the broad areas of the stiles allow flexible placement of the lock set and hinges at the construction site with standard woodworking tools.

Nevertheless, the panel door is not well adapted to applications where security is important. Even with a reasonable thickness of lumber and despite the availability of numerous lumber types, a panel door is still readily breached by strong impact which may break the lock set from the lock stile and/or the strike plate from its opposing jamb. Although this may be remedied somewhat by the use of large protective escutcheons, these are not always effective and, by requiring insertion of additional mounting screws into the door stile, escutcheons may in fact further weaken the stile itself. Escutcheons invariably make the door less attractive.

Accordingly, for security sensitive applications, it is typical to use steel doors. Although these doors may have an embossed surface reminiscent of a panel door, they are generally less attractive and more expensive alternatives to a wooden panel door.

SUMMARY OF THE INVENTION

The present invention recognizes that the weakest point of a wooden panel door is in the orientation of the grain of the stiles with respect to the forces likely to be imposed on the door in an attempted break-in. Specifically, the forces are perpendicular to the grain, tending to separate the individual wood fibers from one another rather than to break or bend the fibers themselves. Accordingly, the present inventors have recognized that a relatively small amount of high tensile reinforcing material counteracting the ease with which fibers may be separated can substantially increase the strength of a wooden panel door against forces incident in an attempted break-in without unduly increasing the cost of the door or diminishing its aesthetic qualities.

In particular, the present invention provides a wood panel door for use with a lock set where the door comprises spaced apart longitudinally extending butt and lock stiles, joined at their ends by transversely extending top and bottom rails to contain at least one panel between the stiles and rails. The lock stile is composed of wood having longitudinally extending grain, with a fiber mat bonded to at least one of the faces of the lock stile near the location of the lock set. The fiber mat is oriented to provide transverse tensile restraint on the grain of the lock stile.

Thus, it is one object of the invention to precisely augment the strength of the lock stile in its weakest direction and thus to substantially increase the resistance of the lock stile to splitting under the forces imposed on the lock stile by the lock set under impact.

The door may also include a decorative wooden stile facing strip, where the fiber mat is sandwiched between the lock stile and the wooden stile facing strip.

Thus, it is another object of the invention to substantially increase the strength of a wooden panel door without detracting from its aesthetic qualities. With the mat sandwiched between the stile and strip, the door still appears to be constructed entirely of wood.

It is a further object of the invention to preserve the natural machinability of a wooden panel door with this added reinforcement. The wooden stile facing strip provides a purchase for hole saws and augers used for installation of a lock set and permits the face of the door to be sanded, stained, and finished in a manner indistinguishable from a conventional wooden panel door.

The fiber mat is preferably fiberglass compressed between the wooden stile facing strip and the wooden stile, with the strip and stile deformed under pressure about the mat and enclosing it, the strip and stile joined at a nearly invisible seam, with none of the fiber mat visible. The high tensile strength of fiberglass permits the amount of mat material to be minimized, preserving the essential wooden quality of the door.

The fiber mat may be placed on the inner surface of the stile to resist an inward buckling of the stile under impact to the lock set from the outside.

Thus, it is another object of the invention to minimize the need for reinforcing material by careful placement of the reinforcing material.

Similar mats may be used to reinforce the doorjamb and stiles at the hinge points and the doorjamb near the location of the strike plate. In both these cases, a wooden facing strip is thicker than the hinge leaves or strike plate, permitting the recessing of the hinge leaves or strike plate per conventional practice without the damaging of the fiber mat.

Thus, it is another object of the invention to improve the resistance to break-in of a wooden panel door and a combined jamb assembly by selectively increasing the strength of all the points of attachment of the door to the jamb assembly.

The foregoing and other objects and advantages of the invention will appear from the following description. In the description, reference is made to the accompanying drawings which form a part hereof and in which there is shown by way of illustration, a preferred embodiment of the invention. For clarity, two simple examples of a control system are provided. Such embodiments do not necessarily represent the full scope of the invention as claimed.

BRIEF DESCRIPTION OF THE DRAWINGS

FIG. **1** is a perspective view from the outside of a wooden six-panel door showing the various components of such a door;

FIG. **2** is a schematicized cross-section along lines **2—2** of FIG. **1** showing an impact on the door knob of the door of FIG. **1** such as causes a transverse separation of the grain of the lock stile of the door;

FIG. **3** is a perspective detailed view of the door of FIG. **1** from the inside in progressive cut-away, showing the

placement of a fiber mat between a stile facing strip and the lock stile to prevent fiber separation under impact;

FIG. 4 is a figure similar to that of FIG. 2 showing the resistance of the transverse forces by the fiber mat during impact against the door knob such as may occur during a break-in attempt;

FIG. 5 is a detailed perspective view of a strike plate inserted in a jamb used with the door of FIG. 1 in progressive cut-away showing the use of a fiber mat to improve the resistance of the jamb to splitting under impact against the door such as would transfer force to the strike plate through a bolt of the lock set; and

FIG. 6 is a fragmentary perspective view of a portion of the butt stile of the door and opposing doorjamb of FIG. 1 in progressive cut-away showing the placement of a fiber mat between a wooden stile edging strip and the edge of the butt stile, the edging strip to receive a recessed hinge shown in exploded view.

DETAILED DESCRIPTION OF THE PREFERRED EMBODIMENT

Referring now to FIG. 1, a wooden six-panel door **10** includes a vertically extending lock stile **12** having grain running in a longitudinal direction **14** and forming a vertical edge of the door **10** adjacent to a doorjamb **16**. The lock stile **12** supports a lock set **18**, containing a bolt (not shown in FIG. 1) which engages a strike plate (also not shown in FIG. 1) contained within the jamb **16**. The vertical edge of the door **10** opposite to lock stile **12** is formed by a butt stile **20** connected by one or more hinges (not shown in FIG. 1) to an adjacent jamb **16**. The butt stile **20** and lock stile **12** are joined at their upper ends by a top rail **22**, which forms the top edge of the door **10** and has grain running in a transverse direction **24**. Similarly, the butt stile **20** and lock stile **12** are joined at their bottom ends by a bottom rail **80**, which forms the bottom edge of the door and has grain running in a transverse direction **24**. Center stile **26** and center rails **28** divide the face of the door **10** into six rectangular areas holding panels **30**.

Referring now to FIG. 2, inward impact force **31** on the door knob **32** causes a transverse tensile force **34** generally perpendicular to the longitudinal direction **14** of the grain of the lock stile **12**. The internal composition of wood may be likened to a set of strong tubes which run along the grain and weakly adhere to each other. Accordingly, forces perpendicular to the grain, which are resisted only by the adherence of the tubes to one another, may easily split the wood. Accordingly, even moderate transverse forces **34** may cause a shattering of the lock stile **12** brought about by a separation of the grain.

Referring now to FIG. 3, in the present invention the inner face **36** of the lock stile **12** in the vicinity of the lock set **18** has bonded to it a loosely woven fiber mat **38** having a high tensile strength in the transverse direction **24**. As shown, the strands of the fiber mat **38** run generally diagonal to the transverse direction **24** and longitudinal direction **14**, but have nevertheless a significant component in the transverse direction **24**. Alternatively, a fiber mat **38** may be used which has strands predominantly in only one direction, the fiber mat **38** being laid on the lock stile such that the strands of the mat **38** are in the transverse direction **24**.

In the preferred embodiment, the fiber mat **38** is made of fiberglass, and is bonded to the lock stile using a bonding agent such as epoxy resin or a phenolic type resin (not shown). Commercial suppliers of fiberglass mats **38** and resin include: Clark-Schwebel, 3M, and Johns-Mannsville. Any commercially available resin may be used to apply the fiberglass mat **38** to the lock stile **12**. Boat-building resins which are specifically designed for bonding fiberglass to a wooden substrate, such as those advertised under the trademark WEST SYSTEM® and manufactured by Gougeon Brothers, Inc., are preferred. The precise epoxy resin (base and hardener) used will be determined by those skilled in the art.

Bonded in a layer on top of the fiber mat **38** is a decorative wooden-stile facing strip **40** which covers the fiber mat **38**, sandwiching mat **38** between the face **36** of a lock stile **12** and strip **40**. The stile facing strip **40** may be a relatively thin veneer, having grain oriented in the longitudinal direction **14** to match that of the underlying lock stile **12** for the sake of appearances. In construction, the lock stile facing strip **40** and lock stile **12** are compressed together during curing of the bonding material holding the fiber mat **38** to the face **36** of the lock stile **12**; this allows the wood of the strip **40** and stile **12** to deform about and enclose the fiber mat **38**, the strip **40** and stile **12** joining at a nearly invisible seam, with none of the fiber mat **38** remaining visible. The stile facing strip **40** is also constructed of the same material as the lock stile **12** so as to accept finishes such as stains in the same way as the lock stile **12** and the rails **28** and panels **30**. In another embodiment, the fiber mat **38** and facing strip **40** are bonded as layers to a lumber stock, which is then milled to produce the stiles or other door components.

Referring to FIG. 4, an impact force **31** on the door knob **32** produces tensile forces **34** which are resisted by the fiber mat **38** which prevents the grains from separating in the lock stile **12**. Although the fiber mat **38** and strip **40** are shown positioned on the interior of the door, mat **38** and strip **40** may alternatively be placed on only the exterior of the door, or it may be desirable to place both fiber mat **38** and strip **40** on both the interior and exterior of the door for added strength.

Referring again to FIG. 3, the lock set **18** may be installed in the panel door **10** by cutting the necessary holes with conventional wood-working tools such as a hole saw and/or auger. The fiber mat **38** may be easily cut by such tools when bonded to the lock stile **12**.

Referring now to FIGS. 3 and 5, the doorjamb, shown generally at **16**, has a face **52** which abuts the adjacent face **54** of lock stile **12** when door **10** is closed. The grain of doorjamb **16** runs in the longitudinal direction **14**. Fiber mat **38** and wooden edging strip **86** may be bonded in layers to face **52**, such that fiber mat **38** is sandwiched between strip **86** and face **52**. Strike plate **56** is positioned to receive the latch bolt **76** of lock set **18**, and the strike plate **56** is recessed into the doorjamb **16** in a manner known to the art to a depth equal to the thickness of strike plate **56**. In this embodiment, the fiber mat **38** has high tensile strength in transverse directions to longitudinal direction **14**, and the use of the fiber mat **38** improves the resistance of the doorjamb **16** to splitting under impact against the door **10**, the force of which impact would transfer to the doorjamb **16** through bolt **76** of the lock set **18**.

Referring now to FIG. 6, the butt stile **20** has a face **72** which is adjacent to face **78** of doorjamb **16** when door **10** is closed. Butt stile **20** and doorjamb **16** each have a grain running in longitudinal direction **14**. Fiber mat **38** and edging strip **84** may be bonded in layers to face **72**, such that fiber mat **38** is sandwiched between strip **84** and face **72**. Similarly, fiber mat **38** and wooden edging strip **88** may be bonded in layers to face **78**, such that fiber mat **38** is

sandwiched between strip **88** and face **78**. Hinge **62** has two leaves **63**, **64** which are attached by screws **60** to faces **72**, **78**, respectively. Leaves **63**, **64** are recessed into faces **72**, **78** to a depth equal to the thickness of leaves **63**, **64**, in a manner known to the art. Strips **84**, **88** may be of thickness greater than that of hinge leaf **64**, and standard woodworking tools may be used to create a recess **74** in strips **84**, **88** shaped to accommodate leaf **64**. In this embodiment, the fiber mat **38** has high tensile strength in transverse directions to longitudinal direction **14**, and thus use of the fiber mat **38** improves the resistance of doorjamb **16** and butt stile **20** to splitting under impact against the door **10**. The face **90** of butt stile **20**, which is the face facing the exterior of the building when the door **10** is closed, may also be covered by wooden facing strip **82**, which is bonded in a layer to butt stile **20**. Facing strip **82** overlaps and conceals the side edge **92** of edging strip **84** such that no seam between facing strip **82** and edging strip **84** are visible.

Portions of the butt stile **20**, the lock stile **12** and the doorjamb **16** may be separately, collectively or in any combination reinforced with layers of fiber mat **38**.

Many other modifications and variations of the preferred embodiment which will still be within the spirit and scope of the invention will be apparent to those with ordinary skill in the art. In order to apprise the public of the various embodiments that may fall within the scope of the invention, the following claims are made:

We claim:

1. A wooden panel door for use with a lock set, the door comprising spaced apart longitudinally extending butt and lock stiles joined at their ends by transversely extending top and bottom rails to contain at least one panel between the stiles and rails, wherein the lock stile is composed of wood having longitudinally extending grain and wherein the lock stile has bonded to at least one face proximate to a location of the lock set, a fiber mat oriented to provide transverse tensile restraint on the grain of the lock stile, including additionally a wooden stile facing strip and wherein the fiber mat is sandwiched between the lock stile and the wooden stile facing strip.

2. The panel door as recited in claim **1** wherein the wooden stile facing strip and lock stile deform inward against the fiber mat to abut without visible seam.

3. The panel door as recited in claim **1** wherein the fiber mat is woven fiberglass.

4. The panel door as recited in claim **1** wherein the face of the lock stile is the face that would be facing an interior of a building when the door is installed.

5. The panel door as recited in claim **1** wherein the fiber mat is bonded to both the face of the lock stile facing the exterior of a building and the face of the lock stile facing the interior of the building when the door is installed.

6. A wooden panel door for use with hinges having hinge leaves recessed to the depth equal to the thickness of a hinge leaf, the door comprising spaced apart longitudinally extending butt and lock stiles joined at their ends by transversely extending top and bottom rails to contain at least one panel between the stiles and rails, wherein the butt stile is composed of wood having longitudinally extending grain and wherein the butt stile has bonded to an edge receiving the recessed hinge leaf, a fiber mat oriented to provide transverse tensile restraint on the grain of the lock stile, the butt stile further having a wooden stile edging strip thicker than the leaf thickness and wherein the fiber mat is sandwiched between the lock stile and the wooden stile edging strip.

7. The panel door as recited in claim **6** wherein the wooden stile edging strip and butt stile deform around and enclose the fiber mat, the strip and stile abutting without visible seam, with none of the fiber mat visible.

8. The panel door as recited in claim **6** including additionally a wooden stile facing strip and wherein a seam between the stile edging strip and the butt stile is covered by the wooden stile facing strip.

9. The panel door as recited in claim **6** wherein the fiber mat is woven fiberglass.

10. A doorjamb assembly for use with a door having a bolt, the doorjamb comprising spaced apart longitudinally extending jamb members joined at their top ends by a transversely extending lintel to frame a doorjamb, the jamb members extending longitudinally by the height of the door and composed of wood having longitudinally extending grain and wherein at least one jamb member has bonded to at least one face proximate to a location of a strike plate for receiving the bolt, a fiber mat oriented to provide transverse tensile restraint on the grain of the jamb member, the jamb member further having a wooden jamb facing strip and wherein the fiber mat is sandwiched between the jamb member and the wooden jamb facing strip.

11. The doorjamb assembly as recited in claim **10** wherein the fiber mat is woven fiberglass.

* * * * *