US005852909A

United States Patent [19]

Soltis et al.

[11] **Patent Number: 5,852,909**

[45] **Date of Patent: Dec. 29, 1998**

[54] **LOCALIZED NOTCH REINFORCEMENT FOR WOODEN BEAMS**

[75] Inventors: **Lawrence A. Soltis**, Mt. Horeb; **Robert J. Ross**; **Douglas R. Rammer**, both of Madison, all of Wis.

[73] Assignee: **The United States of America as represented by the Secretary of Agriculture**, Washington, D.C.

[21] Appl. No.: **943,367**

[22] Filed: **Oct. 3, 1997**

Related U.S. Application Data

[60] Division of Ser. No. 749,604, Nov. 18, 1996, Pat. No. 5,720,143, which is a continuation-in-part of Ser. No. 576,998, Dec. 26, 1995, Pat. No. 5,575,117, which is a continuation-in-part of Ser. No. 204,114, Mar. 1, 1994, Pat. No. 5,501,054.

[51] **Int. Cl.**[6] **E04C 5/07**

[52] **U.S. Cl.** **52/730.7**; 52/105; 52/309.15; 52/736.4; 52/737.5

[58] **Field of Search** 52/105, 730.7, 52/736.4, 737.5, 309.15

Primary Examiner—Christopher Kent

Attorney, Agent, or Firm—Janet I. Stockhausen; M. Howard Silverstein; John D. Fado

[57] **ABSTRACT**

A localized fiber reinforcement places strong tensile strength fibers across a hypothetical split line near notches in beams to curtail split propagation caused by cross-grain tension that may otherwise significantly reduce the strength of a beam used as a spanning member. An adhesive coated patch may be applied after a notch is cut in the beam or fibers may be attached to a beam at a factory near the location of an anticipated notching.

3 Claims, 1 Drawing Sheet

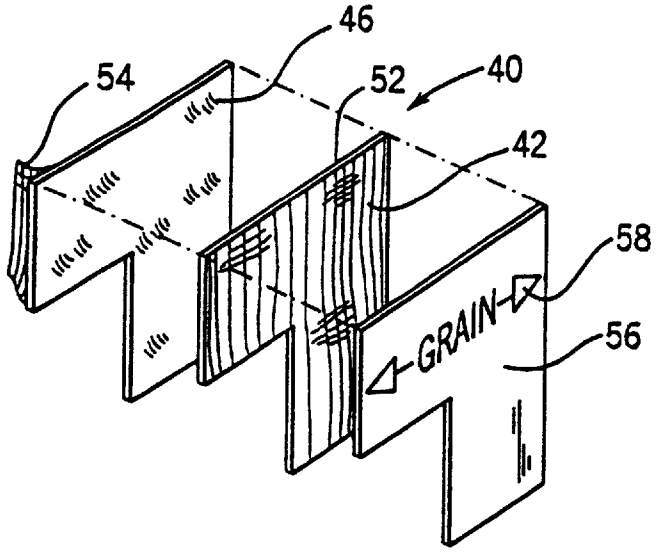

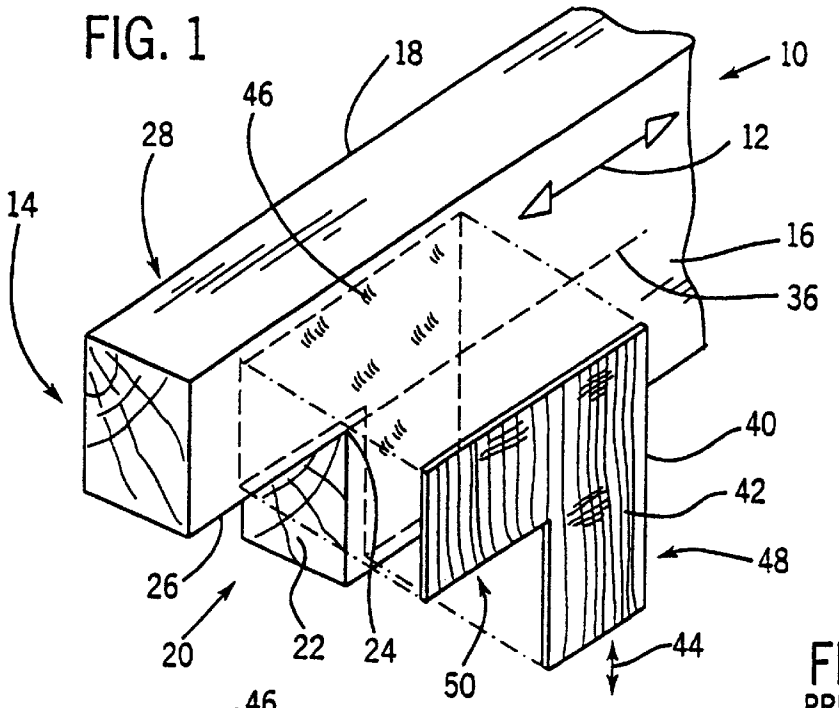
FIG. 1
10
12
14
16
18
20
22
24
26
28
36
40
42
44
46
48
50

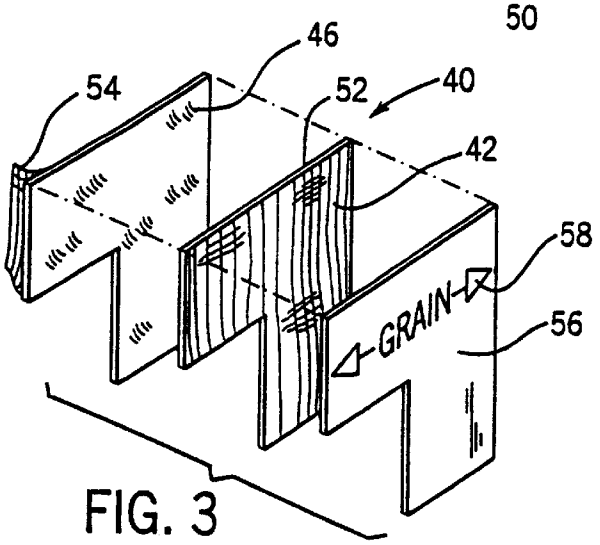
FIG. 3
40
42
46
52
54
56
58
GRAIN

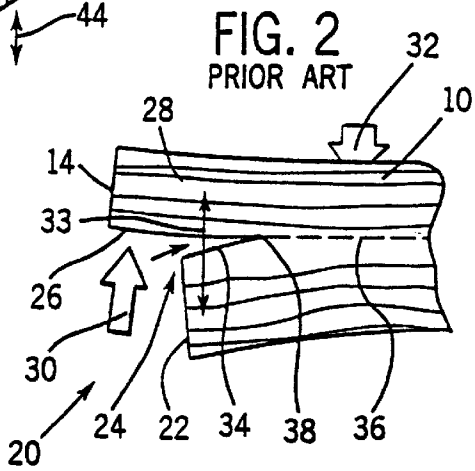
FIG. 2
PRIOR ART
10
14
20
22
24
26
28
30
32
33
34
36
38

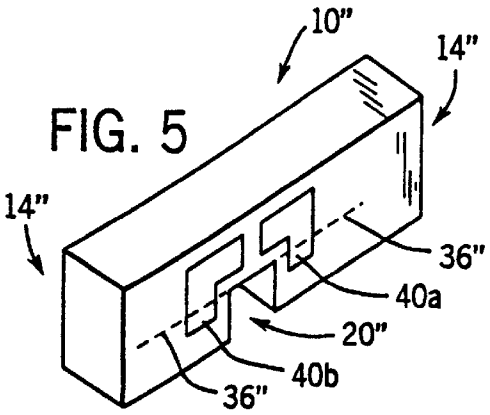
FIG. 5
10"
14"
14"
20"
36"
36"
40a
40b

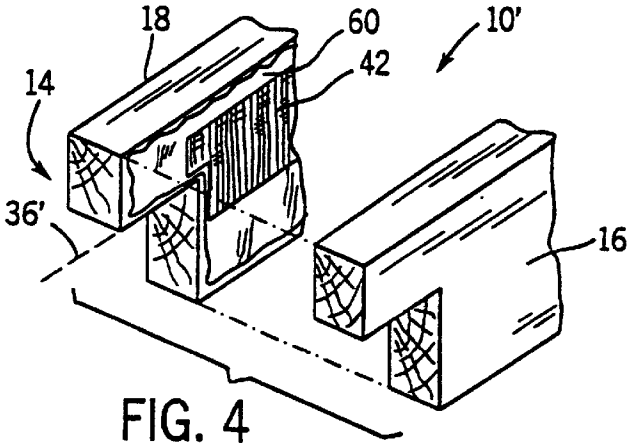
FIG. 4
10'
14
16
18
36'
42
60

LOCALIZED NOTCH REINFORCEMENT FOR WOODEN BEAMS

CROSS-REFERENCE TO RELATED APPLICATIONS

This application is a divisional of U.S. application Ser. No. 08/749,604, filed Nov. 18, 1996 now U.S. Pat. No. 5,720,143 which is a continuation in part of U.S. application Ser. No. 08/576,998 filed Dec. 26, 1995 now U.S. Pat. No. 5,575,119 which is a continuation in part of U.S. application Ser. No. 08/204,114 filed May 1, 1994 now U.S. Pat. No. 5,501,054.

STATEMENT REGARDING FEDERALLY SPONSORED RESEARCH OR DEVELOPMENT

BACKGROUND OF THE INVENTION

The invention relates generally to wooden structural members used in construction and more specifically to a reinforcement method for notched wooden beams.

Wooden beams may be used in construction to provide a horizontal span between walls or between walls and a central girder, for example as floor or ceiling joists. In such applications, the grain of the wood is aligned with the horizontal span.

Wood has relatively little strength perpendicular to the grain in comparison to its strength along the axis of its grain. For example, a sample of Douglas-fir might have parallel-to-grain tensile and compressive strengths of 15,600 and 3,470 PSI, respectively, but perpendicular-to-grain tensile and compressive strengths of only 360 and 340 PSI, respectively.

The strength of a wooden beam in a spanning application derives from the fact that the forces experienced by the beam when loaded are primarily oriented along the grain (tension, compression and shear) with essentially no cross-grain tension. This assumes, however, that the beam is supported underneath its ends and that the beam is of essentially uniform cross section without cuts or notches. This latter assumption may not always be true in practice. Beams may be cut or notched in various places to run utilities or to fit against other structural members. Notches that extend a significant distance into the beam may be an unavoidable part of the building's design or may occur from poor construction techniques.

Generally, a notch in a beam causes some of the loading of the beam to be manifest as cross grain tension, a mode in which wood is relatively weak. Additionally, the stress concentration at the notch re-entrant corner produces stresses to initiate and propagate a crack. As a result, if a spanning beam is to be notched, it is necessary to use reduced loading figures for that beam resulting in the need for larger or more beams than would otherwise be necessary. In renovation projects, where beam number and size is fixed, notching of the beams may not be allowable.

BRIEF SUMMARY OF THE INVENTION

The present inventors have recognized that the loss of strength caused by the notching of spanning beams and the like results not only by the lower strength of wood across its grain, but also because of the dynamics of crack propagation where cross grain tensile stresses are concentrated at the apex of an advancing crack. This concentration of tensile stress significantly decreases the effective strength of the beam in what is already its weakest mode.

Accordingly, the present invention provides localized high tensile reinforcement across the grain of the beam and spanning a line of anticipated crack propagation. By blocking crack propagation, the strength of a notched beam is significantly increased. Further, the need for extensive reinforcement of the entire beam is avoided.

Specifically, the present invention provides a structural member formed of a wooden beam having a grain directed along the length of the beam between ends and across a width of the beam between edges, the length and width defining an area of opposing beam faces. The beam is notched and the notch has a first cut starting at an edge and crossing the grain and extending less than the width of the beam and second cut abutting the first cut at a corner. A tensile reinforcing material is bonded to at least one opposing face across a hypothetical split line starting at the corner and extending parallel to the grain where an axis of tensile strength of the reinforcing material is directed across the grain.

Thus, it is one object of the invention to provide a reinforcement technique that addresses the mechanism of crack propagation through lumber at notches in the lumber. A limited amount of reinforcement near the notch can increase the strength of notched lumber for cross grain loads over its entire length by stopping crack propagation.

It is another object of the invention to provide a substantial increase in the effective load carrying capacity of beams without the need for extensive reinforcement of the entire beam.

A second beam, substantially equal in length and width to the first beam, may be bonded to the first beam to sandwich the tensile reinforcing material between the beam and the one face.

Thus, it is another object of the invention to provide a reinforcement for a notch centered within the likely path of crack propagation.

In one embodiment, the flexible fiber reinforcing material is a patch having fibers running along an axis. An adhesive is applied to one side of the patch and indicia is attached to the patch indicating a desired alignment of the patch with wood grain. The flexible fiber patch may be applied to a wooden beam with the axis perpendicular to the grain of a wooden beam.

Thus it is another object of the invention to provide a reinforcement method which may be used on site when notching of beams is necessary. The indicia is used to properly align the patch and the adhesive to attach the patch to the beam after the notch has been cut.

The foregoing and other objects and advantages of the invention will appear from the following description. In this description, reference is made to the accompanying drawings which form a part hereof and in which there is shown by way of illustration, a preferred embodiment of the invention. Such embodiment does not necessarily represent the full scope of the invention, however, and reference must be made therefore to the claims for interpreting the scope of the invention.

BRIEF DESCRIPTION OF THE SEVERAL VIEWS OF THE DRAWINGS

FIG. **1** is a fragmentary, perspective view of a notched wooden beam showing a projected split line extending from a corner of the notch and showing placement of localized reinforcement per the present invention to span this split line;

FIG. **2** is a simplified elevational view of the beam of FIG. **1** without localized reinforcement showing propagation of a crack along the split line with beam loading;

FIG. **3** is an exploded perspective view of a reinforcement according to the present invention and suitable for application in the field;

FIG. **4** is a fragmentary perspective view of a beam similar to that of FIG. **1** having pre-positioned internal reinforcement along an anticipated spit line; and

FIG. **5** is a perspective view of second beam, similar to that of FIGS. **1**, **2** and **4** but having an internal notch.

DETAILED DESCRIPTION OF THE INVENTION

Referring now to FIG. **1**, a wooden beam **10**, terminating at a first end **14**, has grain **12** running along its length. The wooden beam **10** has generally rectangular cross section taken an perpendicular to the grain **12** and presents generally parallel first and second opposed faces **16** and **18**, respectively. Faces **16** and **18** have lengths commensurate with the length of the beam **10** and heights commensurate with the width of the beam **10**. In use, the wooden beam **10** may be positioned with faces **16** and **18** oriented in vertical planes and with the length of the wooden beam **10** extending horizontally.

A notch **20** is cut in the first end **14** starting at a lower edge and is characterized by having a first cut **22** cutting across the grain **12** to a corner **24** within the wooden beam **10**. At the corner **24**, the first cut **22** meets with a second cut **26**, the latter which extends along the grain **12** from the corner **24** toward the first end **14**. The first cut **22** extends less than the width of the beam **10** so that the notch **20** provides an overhang portion **28** at near end **14** of the beam **10** such as may rest against a sill plate or the like.

Referring now to FIG. **2**, when beam **10** is positioned with the overhang portion **28** resting on top of a support surface **30** (shown schematically as an upward arrow), downward loading on the beam **10** (shown by arrow **32**) creates a tensile force (shown by arrow **33**) on the material of the beam at the corner **24**. The notch **20** causes this tensile force **33** to concentrate at the corner **24** promoting a split **34**. The split **34** travels along a split line **36** extending parallel to the grain **12** of the beam **10** and thus along the length of the beam **10**.

As the split **34** progresses, its apex **38** continues to define a point of concentrated tensile stress permitting the split **34** to expand further even though the total tensile forces **33**, if distributed evenly over the length of the beam would be insufficient to separate the grain **12** of the beam **10**.

Referring again to FIG. **1**, present invention recognizes that localized reinforcement of the beam **10** crossing the split line **36** can substantially increase the working load of a notched beam **10** in spanning applications. In particular, an inverted L-shaped reinforcement patch **40** having a plurality of fiberglass fibers **42** extending along a fiber axis **44**, is attached to one face **16** of the beam **10** by means of an epoxy adhesive **46** applied to the face **16**. The L-shape of the patch **40** allows it follow the first and second cuts **22** and **26** of the notch **20**.

In particular, a vertical, generally rectangular portion **48** of the patch **40** extends somewhat less than the height of the beam **10** to have a lower extent adjacent to the first cut **22** on the face **16** and an upper extent spanning the split line **36**. The fibers **42** and fiber axis **44** are arranged vertically in this portion **48** to cross the grain **12** and the split line **36**.

A second portion **50** of patch **40** extends from the upper extent of the first portion **48** along the direction of the grain **12** onto the overhang portion **28**. The fibers **42** and fiber axis **44** in this portion **50** are also are arranged vertically to cross the grain **12**.

The first portion **48** of the patch **40** serves to check any progress of a crack along the split line **36**. The second portion **50** serves primarily as an alignment guide for the patch **40**, but also increases the strength of the overhang portion **28** against cross grain and shear forces.

A similar patch **40** may be applied to the opposite face **18** of the wooden beam **10** to oppose the first patch **40** and to provide yet further reinforcement. For pre-manufactured beams **10**, these patches **40** may be applied at a factory site.

In an alternative embodiment, the patch **40** shown in FIG. **3** may be adapted to field installation. In this case, the fibers **42** may be attached to a carrier **52** such as a polyester film or the like. An adhesive **46** may then be applied on the opposite side of the carrier **52** and may include a removable backing **54** to expose the adhesive **46** prior to placement of the patch **40** on the beam **10**. The adhesive may be an epoxy such as those advertised under the tradename WEST SYSTEM such as is commercially available from Gougeon Brothers, Inc. of Bay City, Mich. A cover sheet **56** may then be placed over the fibers **42** on the side opposite the adhesive **46** to provide indicia **58** indicating proper alignment of patch **40** with the grain of beam **10**. In a preferred embodiment, the indicia provides a printed arrow indicating the grain direction in the beam **10** when the patch **40** is properly affixed to the beam **10**.

Such a patch **40** may be used on the work site when it is necessary to notch a beam **10** for utilities and the like. When the notch **20** is positioned in the middle of the beam multiple patches **40** may be used on each face **16** and **18** to flank the notch **20** and thus, it may be desirable to produce a right and left handed version of the patch **40** with the placement of the cover sheet **56** and the adhesive **46** reversed in the two versions.

Referring now to FIG. **4**, a prefabricated notchable beam **10'** may be constructed by ripping a normal beam **10** along its length midway between faces **16** and **18** to separate the beam **10'** into two parts. Fibers **42** may be glued with an adhesive **60** to the cut face of one half of the beam **10'** across an anticipated split line **36'** near the ends **14** of the beam **10'**. The fibers may be laid solely cross grain. The same adhesive **58** is then used to join the halves of the beam **10'** together again about the fibers **42** to hold and stabilize the fibers **42**.

Because the exact location of the notch may not be known in advance, the fibers **42** may be placed to extend along the middle one-third of the width of the beam for the last several feet of the beam **10'** at each end or other locations to accommodate reasonably expected notching operations as the beam ends. The fiberglass fibers **42** as embedded in the beam **10'** may be readily cut with ordinary wood saws.

Referring now to FIG. **5**, the present invention is also applicable in a beam **10"** where the notch **20"** is placed between ends **14"** where the cuts of the notch start and end at an edge of the beam **10"**. Here the left and right hand versions of the patch **40** (indicated as **40***a* and **40***b*) may be used to reinforce the split lines **36"** extending in two directions from the notch **20"** along the line of the grain **12**.

The above description has been that of a preferred embodiment of the present invention it will occur to those that practice the art that many modifications may be made without departing from the spirit and scope of the invention.

In order to apprise the public of the various embodiments that may fall within the scope of the invention, the following claims are made:

We claim:

1. A field-ready wood beam reinforcement system comprising:

a flexible fiber patch having at least some fibers running along an axis;

an adhesive applied to one side of the patch;

indicia attached to the patch indicating a desired alignment of the patch with wood grain;

wherein the flexible fiber patch may be applied to a wooden beam with the axis crossing the grain of the wooden beam.

2. The field-ready wood beam reinforcement system of claim **1** wherein the patch is "L" shaped to fit adjacent to a notch in the wooden beam.

3. The field-ready wood beam reinforcement system of claim **1** wherein the fibers are fiberglass.

* * * * *