US006352605B1

(12) **United States Patent**
Hunt

(10) **Patent No.: US 6,352,605 B1**
(45) **Date of Patent: Mar. 5, 2002**

(54) **METHOD OF MAKING THREE-DIMENSIONAL LAMINATED STRUCTURES**

(75) Inventor: **John F. Hunt**, Madison, WI (US)

(73) Assignee: **Sonoco Development, Inc.**, Hartsville, SC (US)

(*) Notice: Subject to any disclaimer, the term of this patent is extended or adjusted under 35 U.S.C. 154(b) by 0 days.

(21) Appl. No.: **09/419,648**

(22) Filed: **Oct. 18, 1999**

(51) **Int. Cl.**[7] **B31F 1/00**; B31F 5/00

(52) **U.S. Cl.** **156/211**; 156/222; 156/263

(58) **Field of Search** 428/132; 156/211, 156/222, 252, 253, 256, 257, 263, 322, 182, 268, 226, 227; 493/374, 382, 347, 334, 350, 356, 344, 379, 390, 393, 394, 964; 242/118.8

(56) **References Cited**

U.S. PATENT DOCUMENTS

1,849,270 A		3/1932	Bolger	
2,363,425 A		11/1944	Klein	
2,493,562 A		1/1950	Yarman	
3,673,057 A	*	6/1972	Fairbanks	156/256
3,675,692 A		7/1972	Jeans	
3,793,791 A	*	2/1974	Wootten	156/252
3,838,602 A		10/1974	Hanson et al.	
3,853,286 A		12/1974	Beder et al.	
3,876,073 A		4/1975	Herbetko	
4,435,237 A		3/1984	Hoelzinger	
4,492,350 A		1/1985	Dgetluck	
4,610,355 A		9/1986	Maurer	
5,022,943 A		6/1991	Zaima	
5,472,540 A		12/1995	Marschke et al.	
5,513,819 A		5/1996	Orange	
5,609,557 A		3/1997	Te	
5,643,384 A		7/1997	Okabe	
5,735,483 A		4/1998	Bierlein	
5,746,871 A		5/1998	Walsh	

OTHER PUBLICATIONS

SUS–RAP Packaging Web page, published by Menasha Corporation, Danville, PA.

* cited by examiner

Primary Examiner—Jeff H. Aftergut
Assistant Examiner—Barbara J. Musser
(74) *Attorney, Agent, or Firm*—Bullwinkel Partners

(57) **ABSTRACT**

A three-dimensional laminated structure and method for making same are provided. The method involves die-cutting a plurality of sheets, including cutting through the sheets around part of the periphery of selected sections, aligning and bonding the sheets, and forming the selected sections out-of-plane with a forming tool.

7 Claims, 9 Drawing Sheets

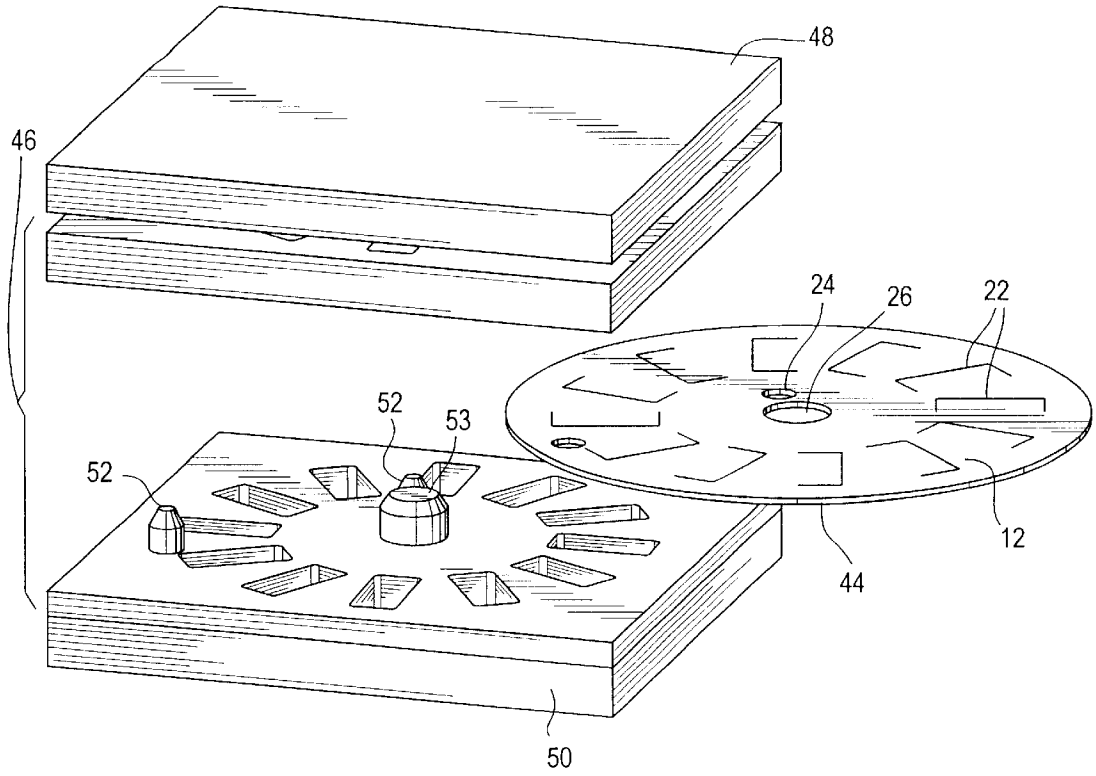

Fig. 1

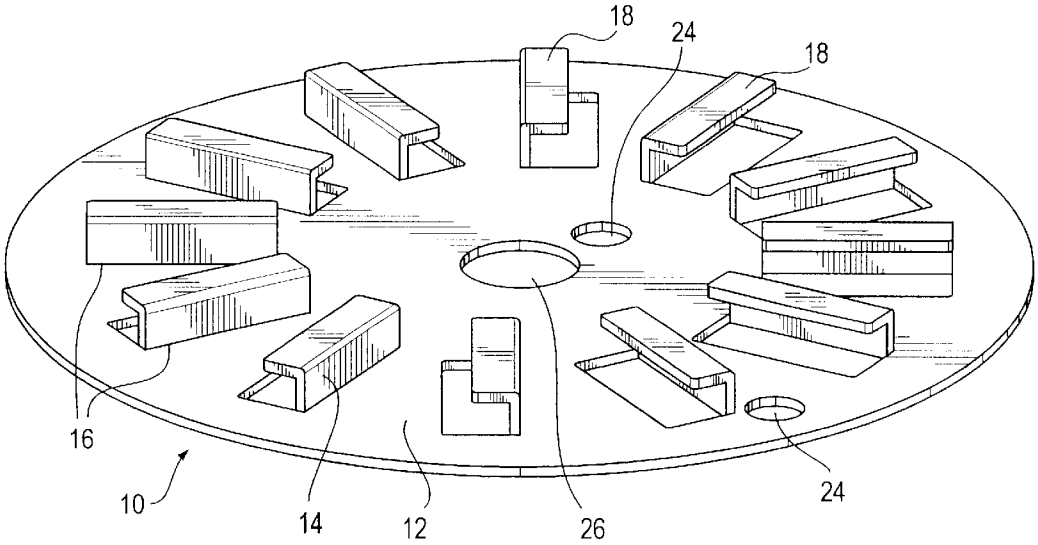

Fig. 2

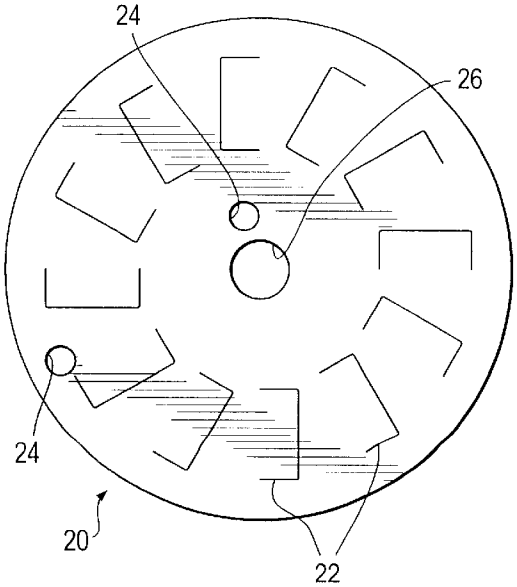

Fig. 3

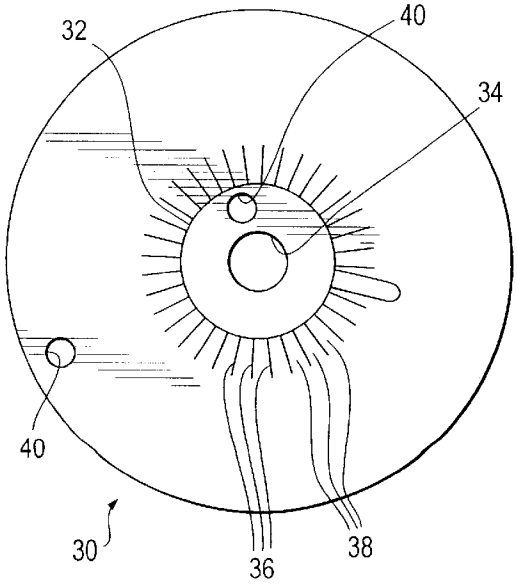

Fig. 4

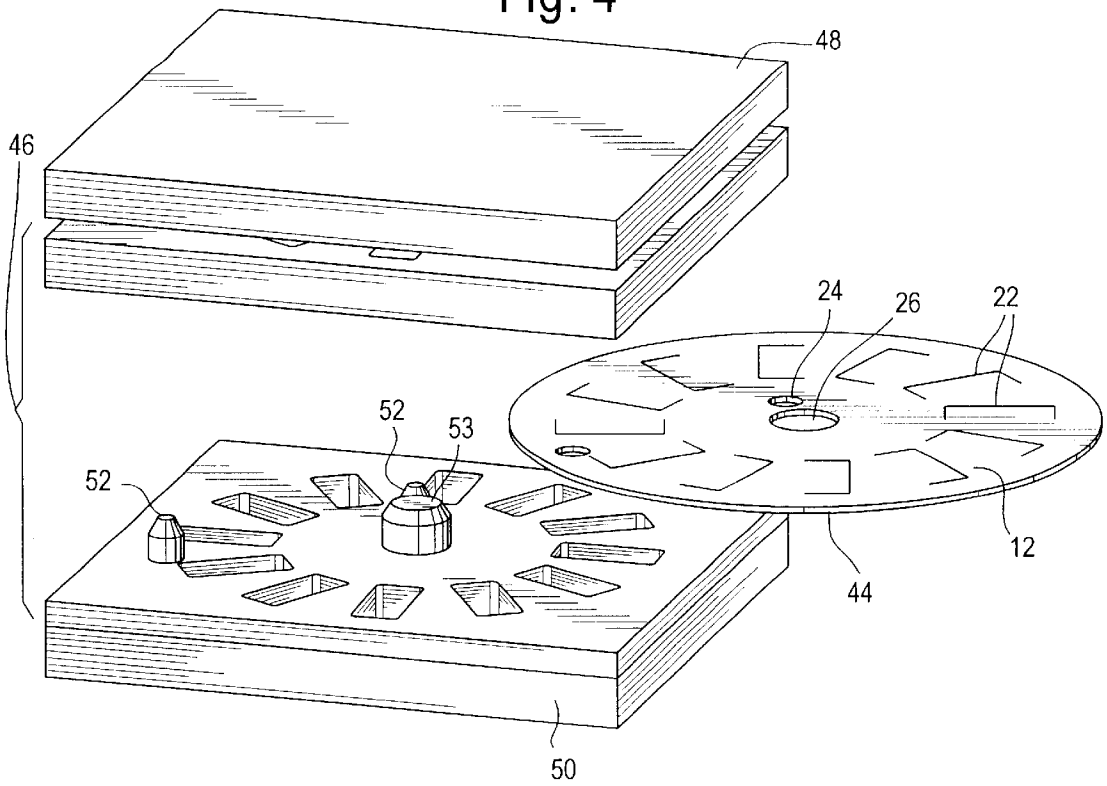

Fig. 5

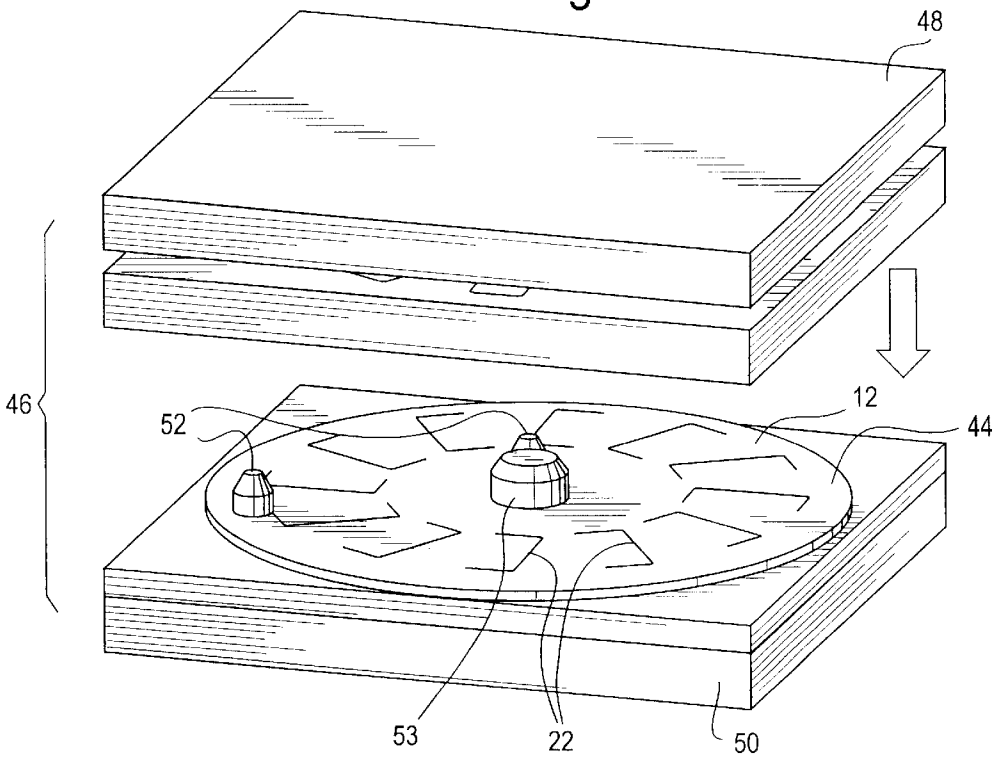

Fig. 6

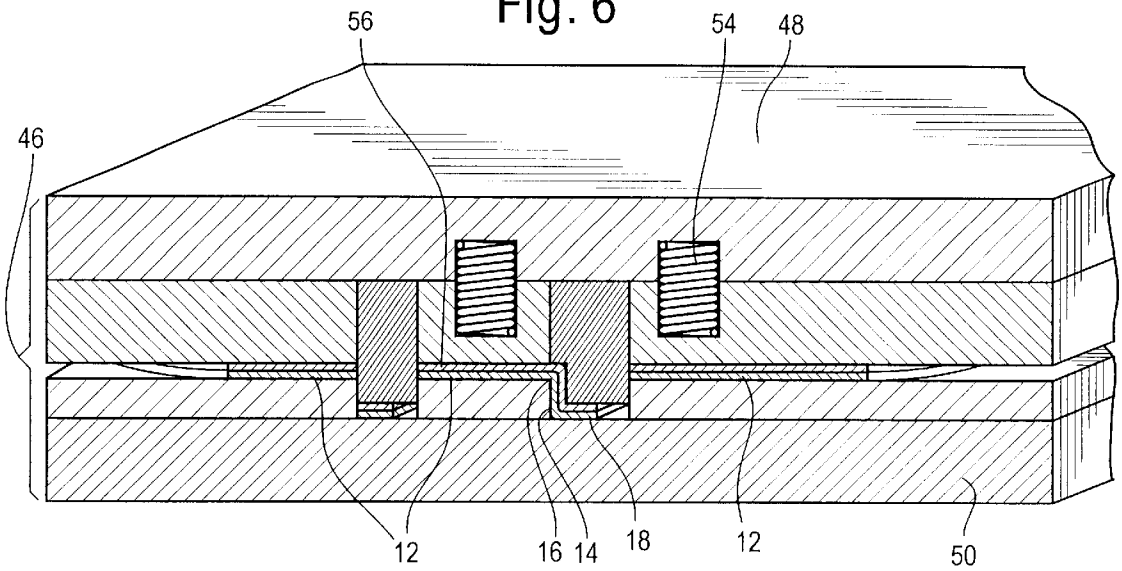
56
54
48
46
12
16
14
18
12
50

Fig. 7

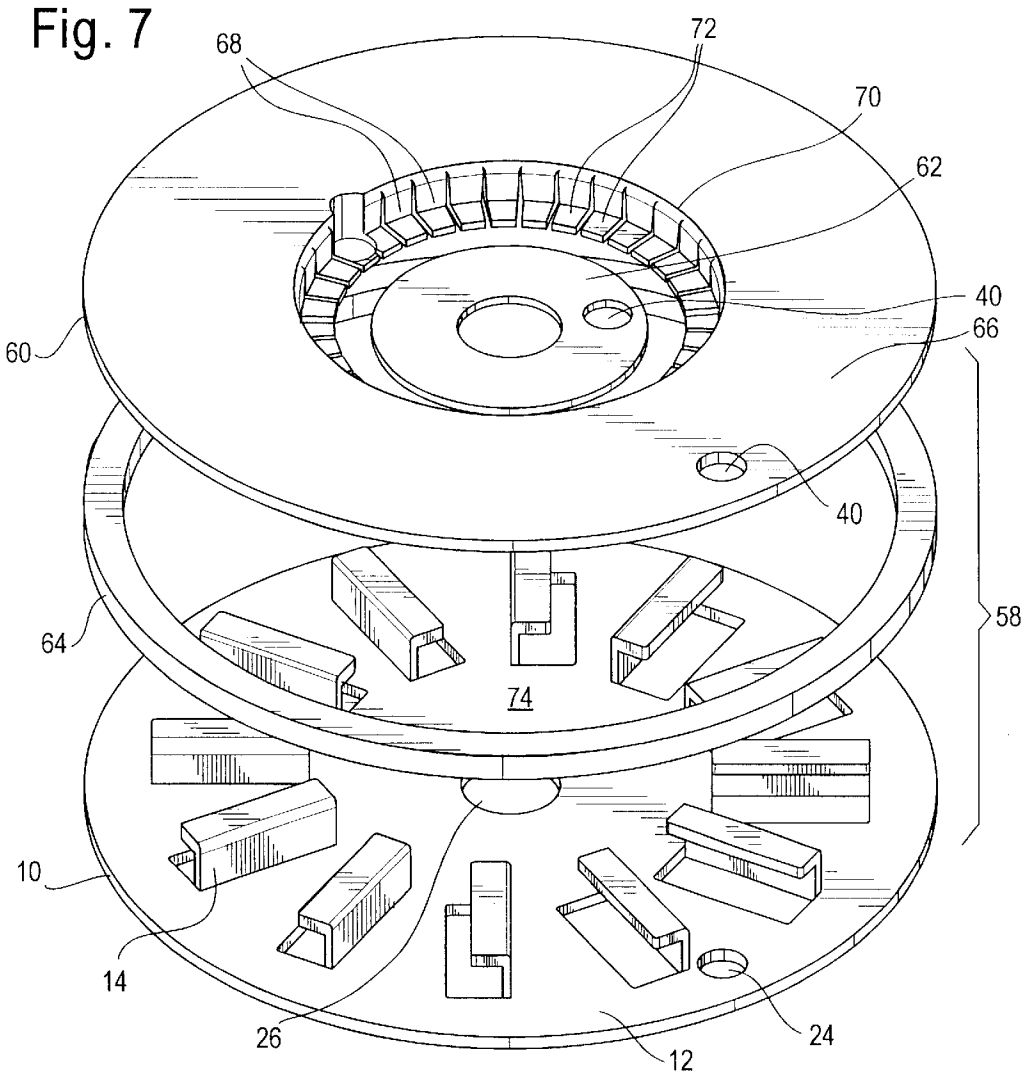
68
72
70
62
40
66
60
40
58
64
74
10
14
26
12
24

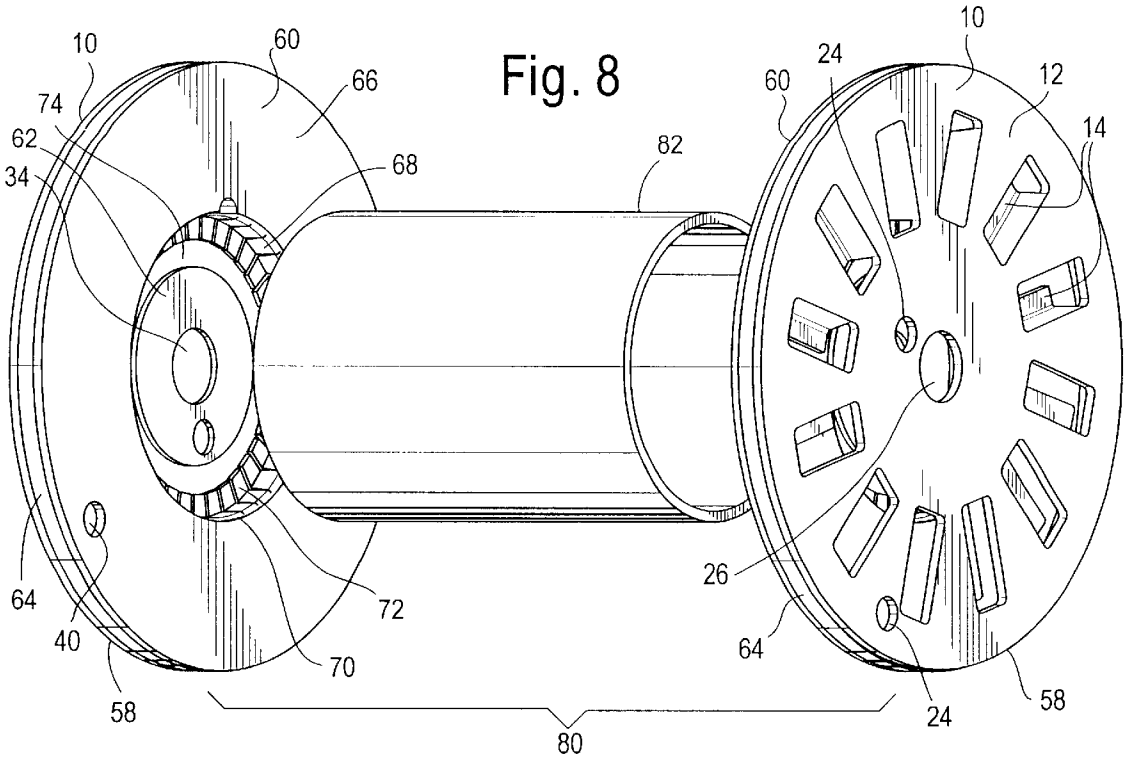
10
60
66
74
62
34
68
82
60
24
10
12
14
26
64
40
58
72
70
64
24
58
80

Fig. 8

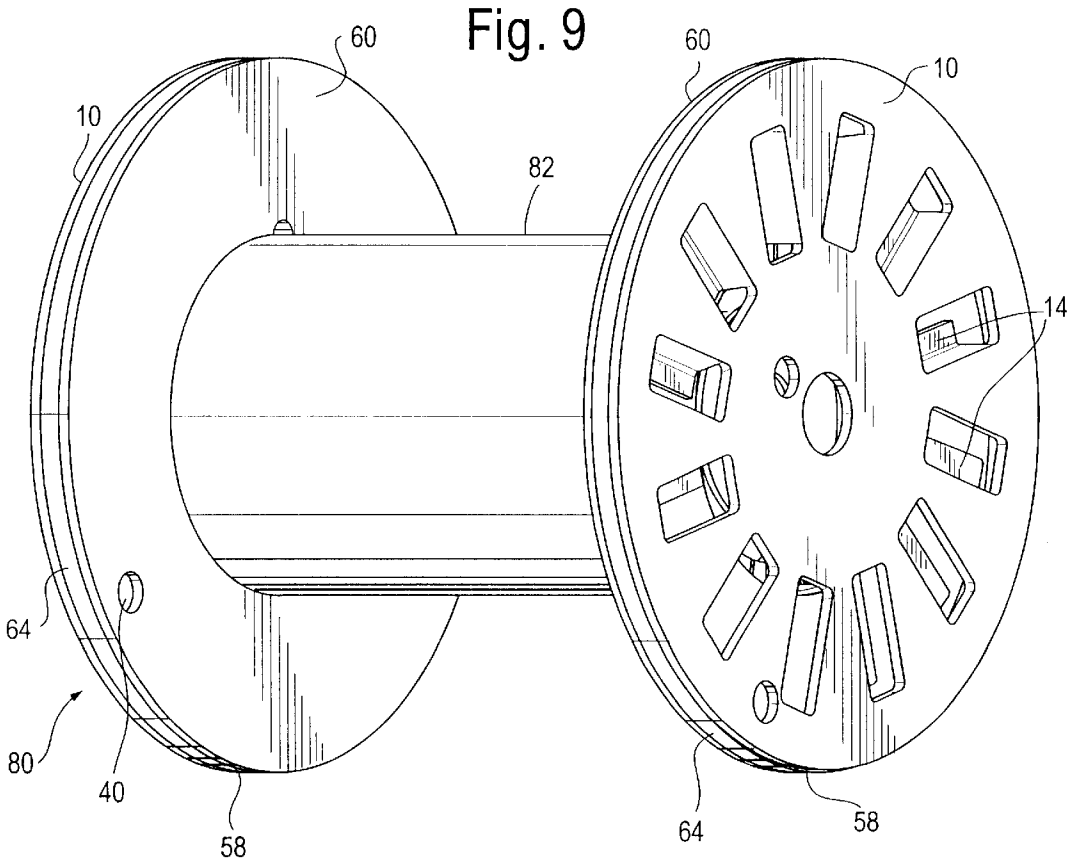
60
60
10
10
82
14
64
80
40
58
64
58

Fig. 9

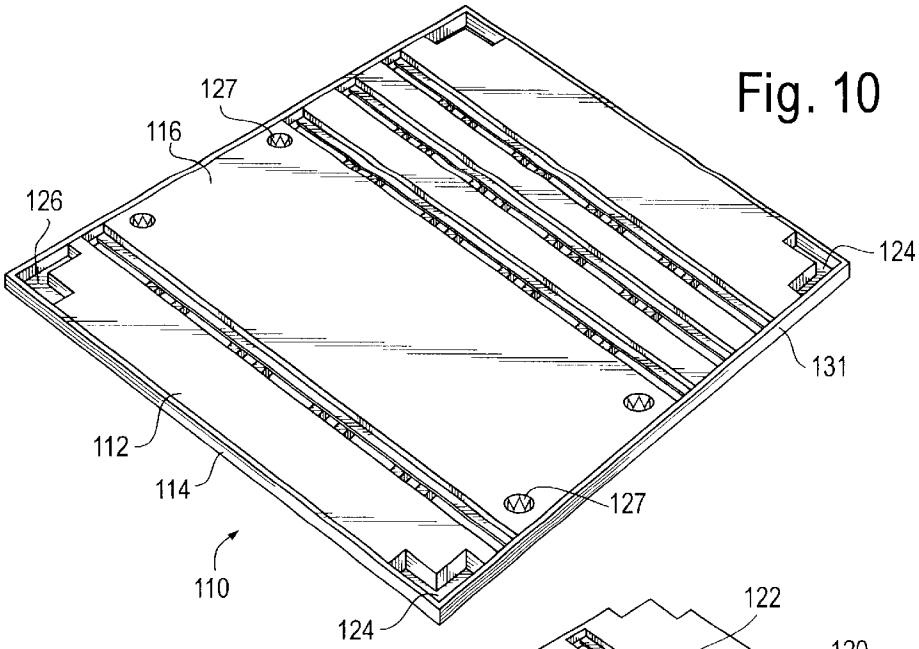
127
116
126
124
131
112
114
127
110
124

Fig. 10

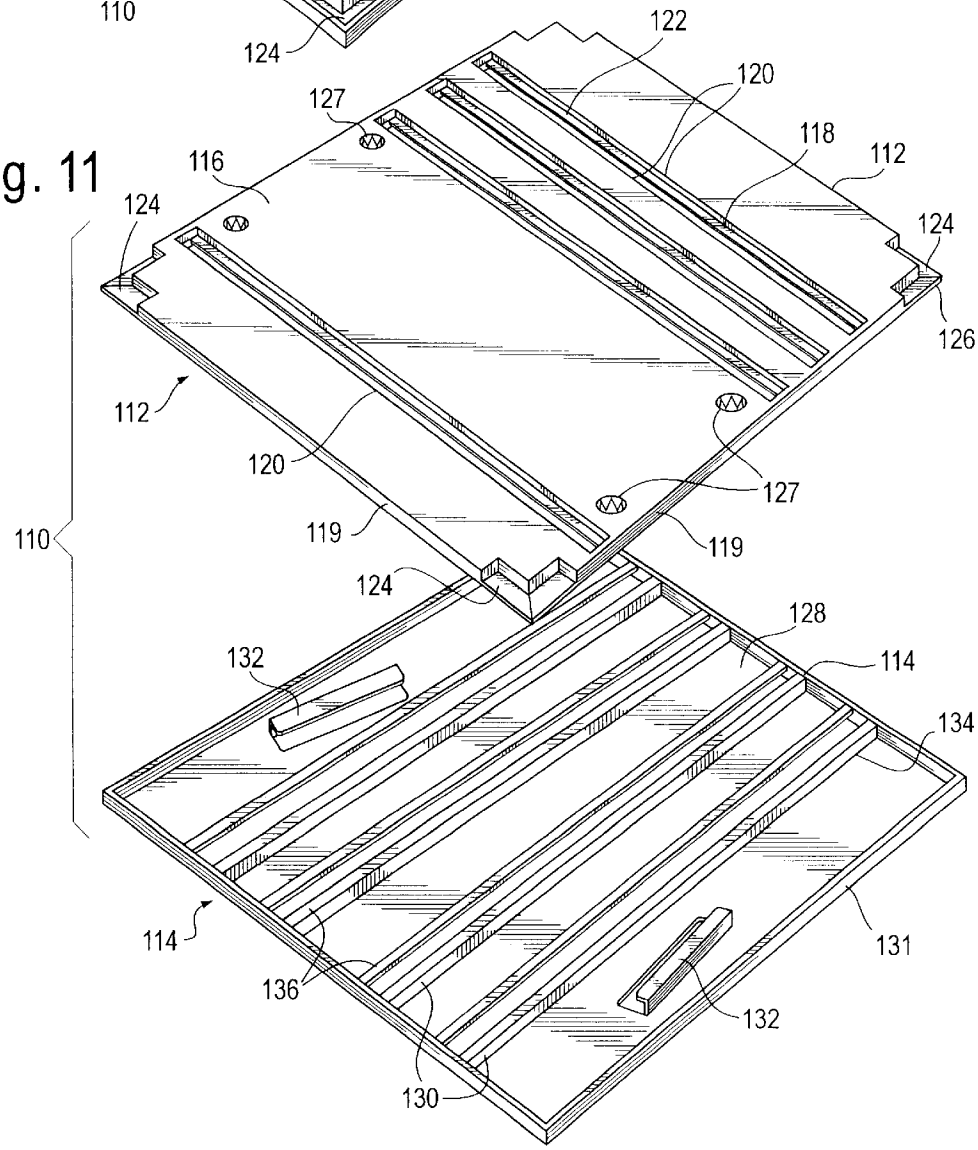
122
120
127
118
112
116
124
124
126
112
120
127
110
119
119
124
128
132
114
134
114
131
136
132
130

Fig. 11

Fig. 12

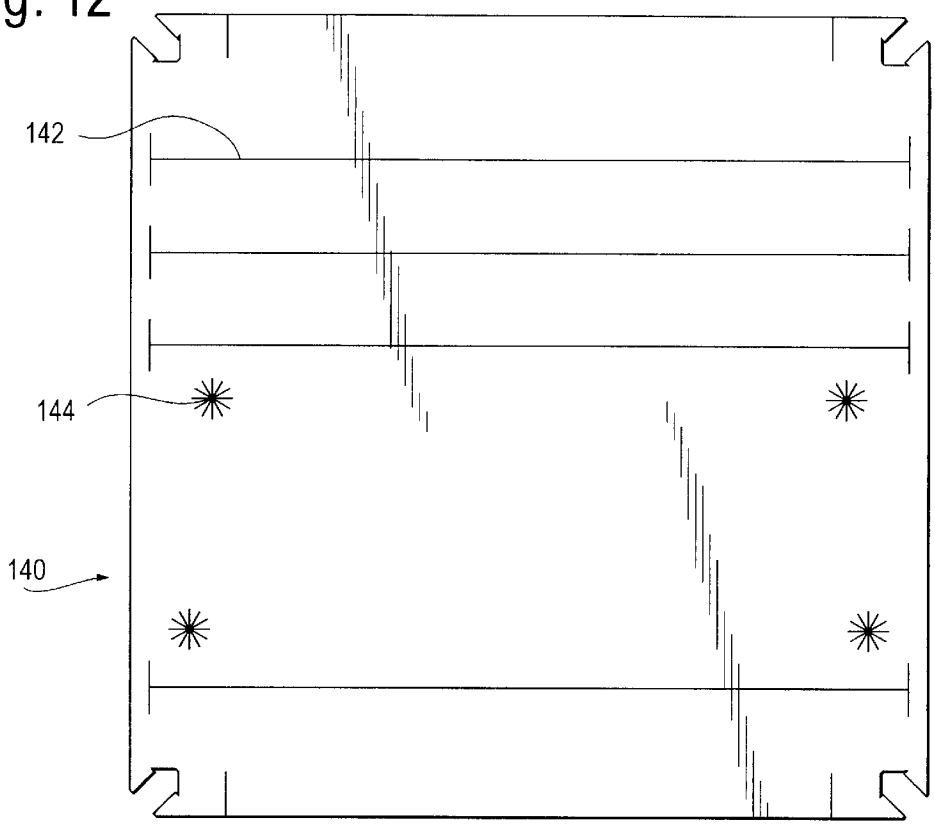

Fig. 13

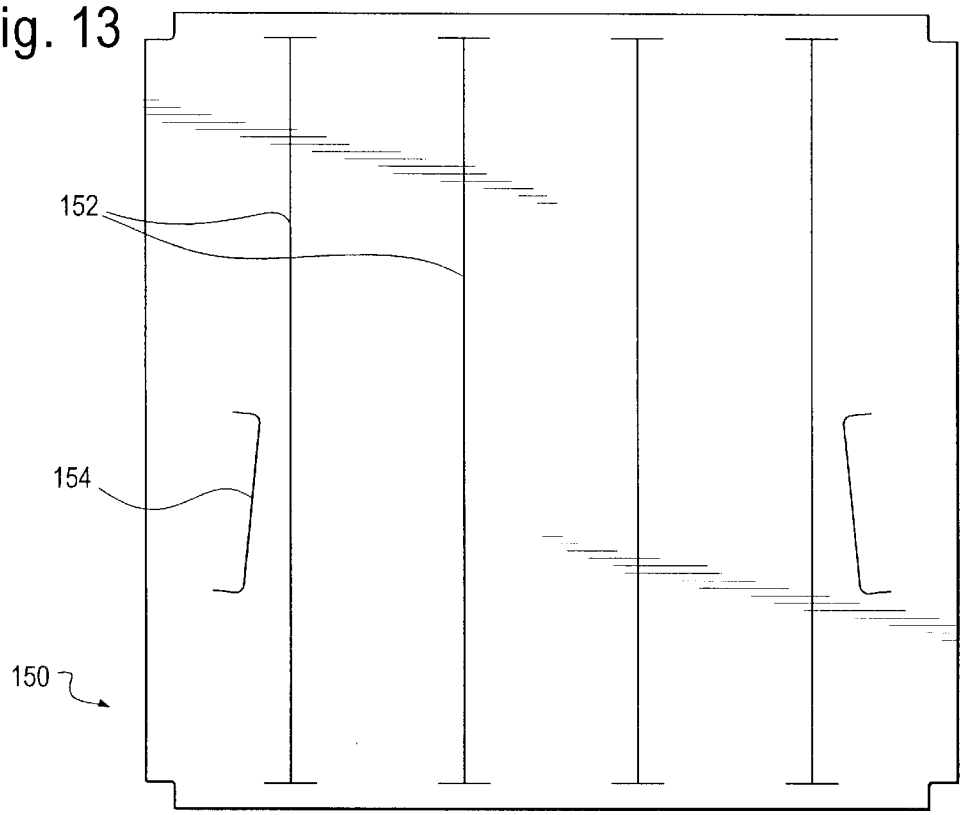

Fig. 14

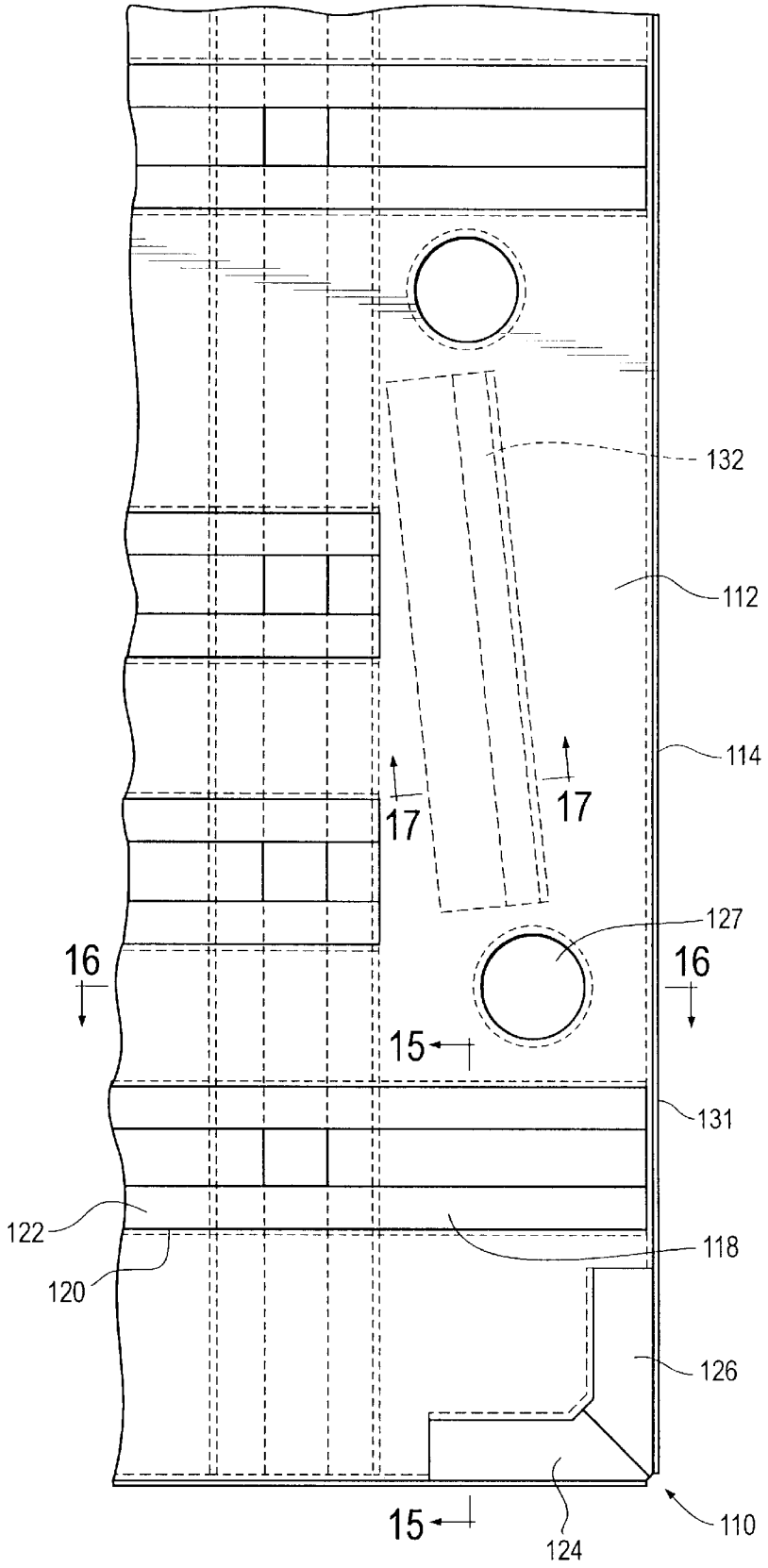

FIG. 15

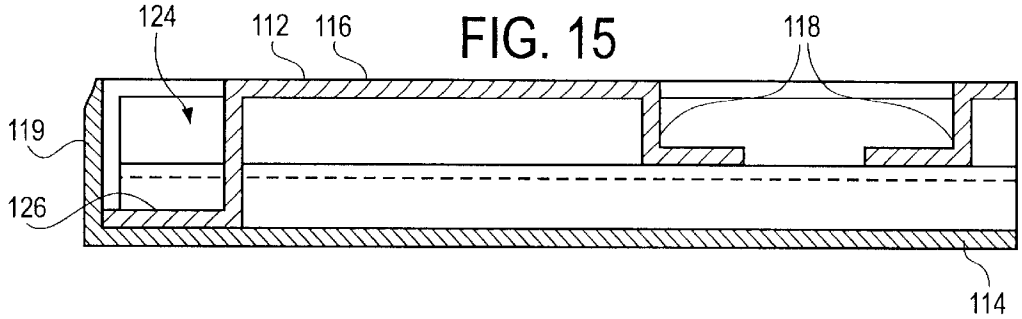

FIG. 16

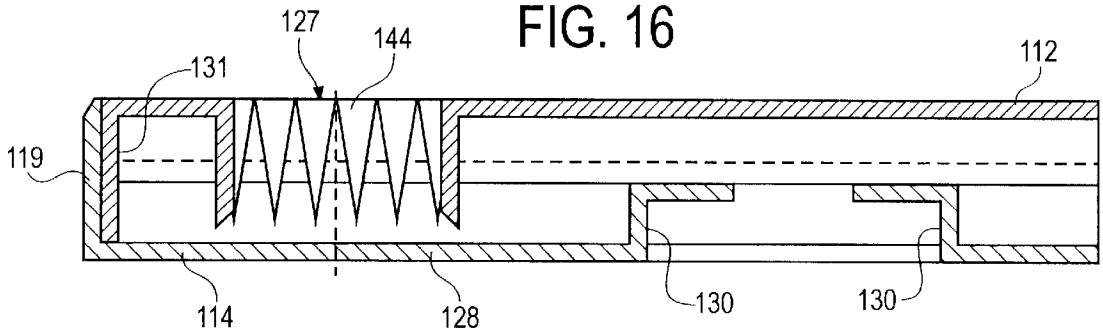

FIG. 17

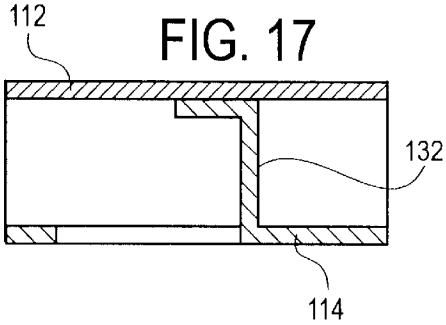

FIG. 18

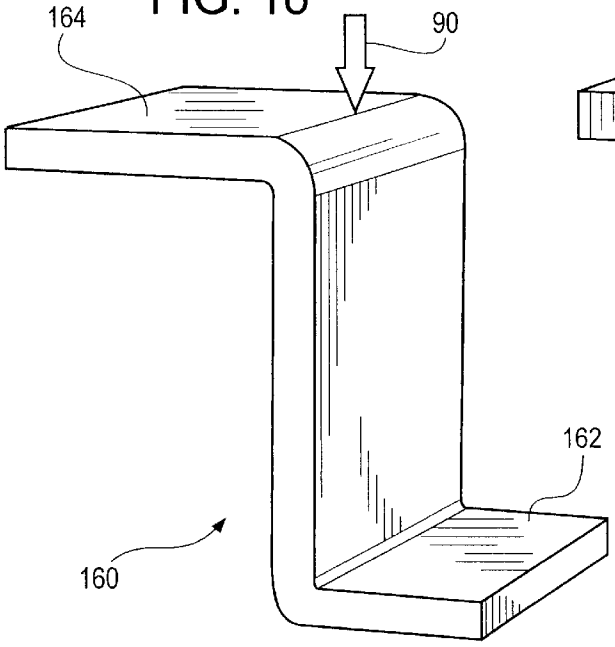

FIG. 19

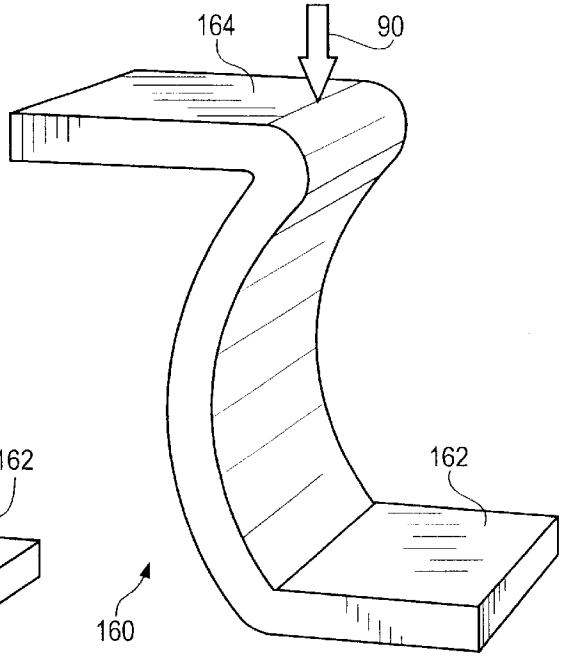

FIG. 20

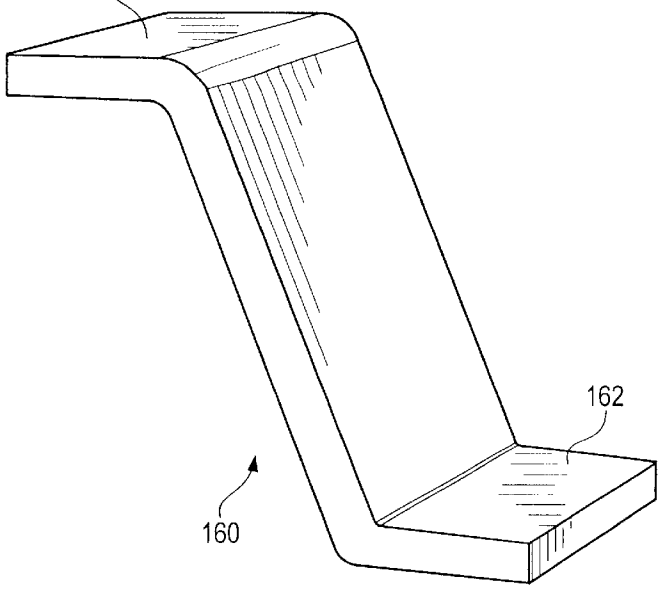

FIG. 21

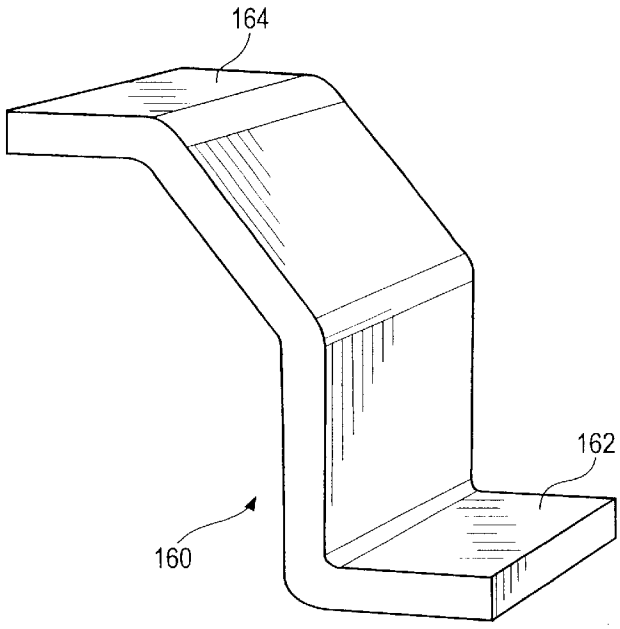

FIG. 22

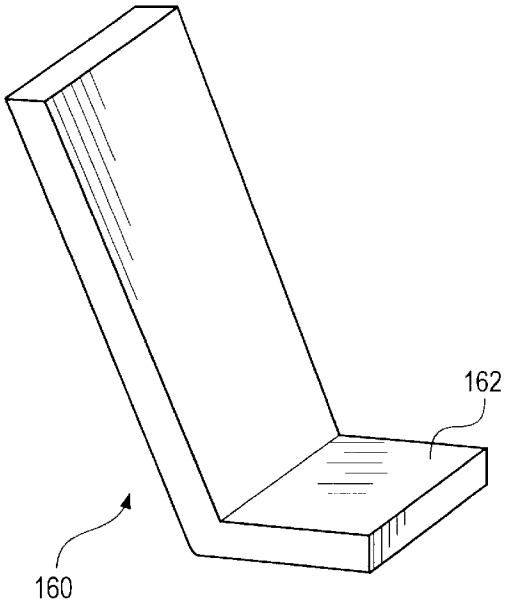

METHOD OF MAKING THREE-DIMENSIONAL LAMINATED STRUCTURES

STATEMENT REGARDING GOVERNMENT RIGHTS

The U.S. Government is the owner of this invention.

BACKGROUND

1. Field of the Invention

This patent relates to three-dimensional laminated structural/cushioning products and a method of making same. More particularly, this patent relates to laminated structures that are die-cut and formed into three-dimensional shapes more complex than those of laminated structures made by conventional methods.

2. Description of the Related Art

Numerous methods are known to fabricate paper or paperboard into structural and cushioning products. Two primary methods are (1) die-cutting corrugated paperboard panels and folding and gluing the panels to make corrugated boxes, furniture, pallets, reels, packaging, appliance bases, etc.; and (2) die-cutting paper sheets, then laminating and molding the sheets into flat or curved sections for chair backs, seats, etc.

The method of die-cutting corrugated panels and folding and gluing the panels into structures is well known in the corrugated industry. The corrugated panel typically is made of two or more layers of paperboard in alternating sequence of flat paperboard followed by corrugated paperboard. The corrugated paperboard is used to separate the flat paperboard sheets to increase structural efficiency of the panel by placing more material away from the structure's core. The flat paperboard sheets and corrugated paperboard sheets are bonded together with an adhesive applied to the top and bottom of the corrugations. When bonded together, the sheets form a stiff flat panel.

To produce structural or cushioning articles from the flat panel, the panel is scored along selected lines. The scored lines facilitate folding at specific locations. Folding is accomplished by crushing the corrugated paperboard along the scored lines. After folding the corrugated panel into the desired configuration, overlapping panels may be glued in place.

The basic corrugated "sandwich" structure is maintained on either side of the scored line. The strength of the finished structure may be enhanced with various folds to include perpendicular ribs or to increase the number of flat and corrugated paper layers. In some instances the structure is made by folding the material, then, if needed, the structure can be unfolded back into a flat sheet for shipping or storage.

In making corrugated structures according to this cut-and-fold method, often the folded score lines are not permanently folded. That is, the folded score lines may act as a living hinge that can be worked back and forth.

In some instances wood or structural foam may be inserted into the corrugated paperboard structure for added strength. In such instances the process of making the basic corrugated structure is similar to that just described.

Unfortunately there are numerous disadvantages to these corrugated paperboard structures. First, the bonding between the flat sheets and the corrugated sheets lies only along narrow corrugated ridges, which results in a relatively weak bond and consequently a relatively weak structure. As will be seen, the three-dimensional paper laminate structure of the present invention has no such weakness.

Second, folding a panel of corrugated paperboard is accomplished by scoring or crushing the corrugated flutes along a line, which in some situations decreases the strength of the structure. With three-dimensional paper laminates made according to the present invention, no crushing occurs, even along fold lines, because the laminate layers fold as a unit. Consequently, the strength of the paper laminate is preserved along the fold line.

Third, corrugated paperboard living hinge lines tend to weaken and become prone to shifting as the lines are worked back and forth. By contrast, with three-dimensional paper laminates such as that disclosed herein, the fold line is rigid and is not easily bent back after the adhesive sets. Consequently, the fold lines of the present invention are strong.

Fourth, corrugated panels are prone to buckling under load. The strength of corrugated panels can be increased by increasing the number of layers of corrugated and flat sheets. However, during bending, the maximum stress is carried by the top and bottom paperboard layers. For corrugated panels, the top and bottom layers are only one paper sheet thick and this sheet is prone to buckling under load.

By contrast, with three-dimensional paper laminates such as that taught herein, most of the core paper material is at the surface of the structure. Where two paper laminates are joined to make a two-sided structure, only the die-cut sections are formed into the core of the structure to provide shear transfer and maintain the distance between the planar surfaces of the two paper laminates, while most of the paper laminate material remains at the planar surfaces. Each planar surface typically has more than two layers of paper laminates bonded together which significantly increases structural stiffness. Structural stiffness, defined as the material modulus of elasticity (E) times the area moment of inertia (I), increases as a cubic function of thickness. Thus, a doubling in the thickness of each planar surface increases the stiffness of the planar surface by a factor of eight.

Finally, corrugated paperboard is prone to surface damage from localized impact because the strength at the surface is based on only one layer of flat paperboard and the corrugated paperboard beneath. Paper laminates, on the other hand, are inherently stronger with each additional laminate layer. With paper laminates, localized crushing or damage due to impact can be minimized by increasing the number of paper layers.

The second conventional method of fabricating paper or paperboard into structural and cushioning products—die-cutting paper and then laminating and molding it into flat or curved sections—is best known in the packaging and furniture industries for making pallet components, chair backs and seats, etc. To make a flat or curved laminated paper structure, multiple sheets of paper are die-cut to final or near-final dimensions. A layer of adhesive or thermoplastic polymer is then placed between each paper layer. If the structure is bonded with a setting adhesive, then before the adhesive sets the layers of paper are placed in a curved mold and pressed and held with pressure until the adhesive sets sufficiently for the structure to be removed and the shape maintained. If the structure is bonded with a thermoplastic polymer, either the layers of paper are preheated sufficiently to allow the plastic to shear or flow and then the laminates are placed into a mold and pressed into shape, or heat is applied in the mold to allow the plastic to flow and the mold is then cooled to set the thermoplastic polymer and hold the paper layers in place.

In either bonding method—adhesive or thermoplastic polymer—the laminated structure is generally continuous

and has a uniform thickness across the curved shape. The exception to the continuous structure may be the inclusion of holes for screw inserts or access openings for hand-holds or the like.

Like corrugated paperboard structures, there are numerous disadvantages to conventional paper laminates. First, it is often necessary to bond conventional paper laminated shapes to a core material to produce a stress skin that has sufficient stiffness, which increases cost and complexity. By contrast, three-dimensional paper laminates that are die-cut and formed according to the present invention to achieve sufficient stiffness do not require bonding to a core material.

Second, conventional paper laminates can have curvatures, but they cannot have sharp complex curves or shapes. The die-cutting and molding process disclosed herein can produce paper laminates having complex out-of-plane structural and cushioning features.

Finally, it is difficult with conventional paper laminates to make out-of-plane structural features. Conventional paper laminates sometimes have access openings, but these are for functional purposes (eg. hand holds) and not for structural purposes. The present invention provides a noncontinuous planar structure having die-cut areas that are formed (pressed) out-of-plane to make structural features such as struts, flanges, bosses and other reinforcement type features.

Thus it is an object of the present invention to provide a three-dimensional laminated structural/cushioning product and method of making same that eliminates many of the disadvantages of conventional corrugated paperboard and laminated products.

A particular object of the present invention is to provide a laminated product having out-of-plane structural features that are more complex than conventional laminated structures.

Another object of the present invention is to provide a die-cut molded laminated structure with superior strength compared to corrugated structures.

Yet another object of the present invention is to provide a die-cut molded laminated structure that can be designed with specific performance or geometric characteristics that are a function of the laminate material, laminate fiber orientation, strut placement and strut shape.

Further and additional objects will appear from the description, accompanying drawings, and appended claims.

SUMMARY OF THE INVENTION

The present invention is a three-dimensional laminated structure and method for making same. Structures that may be made using the present method include reel flanges, appliance bases, pallets, furniture and packaging articles. The method is similar to the method for making conventional die-cut paper laminate structures, but includes two additional novel steps. The first additional step is to make specific die-cuts into the laminates where the laminate will be formed out-of-plane. The second additional step is to form the out-of-plane features using a punch and die like assembly.

THE DRAWINGS

FIG. **1** is a perspective view of a reel flange component made according to the present invention;

FIG. **2** is a top plan view of a paper sheet die-cut to form the reel flange component of FIG. **1**;

FIG. **3** is top plan view of a second paper sheet die-cut to form second and third reel flange components;

FIG. **4** is schematic of a punch and die like assembly, shown with a laminate prior to placing it in the punch and die assembly;

FIG. **5** is a schematic of the punch and die assembly of FIG. **4** after the laminate has been loaded onto the die assembly with the punch assembly closing;

FIG. **6** is a cutaway view of the punch and die assembly after the punch has pushed sections of the paper laminate into the desired out-of-plane positions;

FIG. **7** is an exploded perspective view of a reel flange according to the present invention, showing the four components of the flange, three of which are formed using the method of the present invention;

FIG. **8** is an exploded perspective view of a reel, showing two flanges made according to the present invention and a paper tube;

FIG. **9** is a perspective view of a finished reel made with components made according to the present invention;

FIG. **10** is a perspective view of an appliance base made according to the present invention;

FIG. **11** is an exploded perspective view of the appliance base of FIG. **10** showing the top and bottom members;

FIG. **12** is a top plan view of a paper sheet die-cut to form the top member of FIG. **11**;

FIG. **13** is top plan view of a second paper sheet die-cut to form the bottom member of FIG. **11**;

FIG. **14** is an enlarged top view of a section of the appliance base of FIG. **10**;

FIG. **15** is a cross-sectional view of the appliance base of FIG. **14** taken along line **15—15**;

FIG. **16** is a cross-sectional view of the appliance base of FIG. **14** taken along line **16—16**;

FIG. **17** is a cross-sectional view of the appliance base of FIG. **14** taken along line **17—17**; and

FIGS. **18–22** are perspective views of five possible strut configurations according to the present invention.

DETAILED DESCRIPTION OF THE INVENTION

The present invention is a three-dimensional laminated structure and method for making same. The method is similar to the method of die-cutting paper laminates known in the art, with two additional steps incorporated into the method. The first additional step is to make specific die-cuts into the laminates where the laminate will be formed (pressed) out-of-plane. The second additional step is to form the out-of-plane features using a punch and die like assembly.

The three-dimensional laminated structure comprises one or more sheets of material that have been laminated and die-cut into a desired shape. The structure has a substantially planar surface and at least one component formed out-of-plane and connected to the planar surface along a rigid fold line. The type of material and the laminate fiber orientation may be varied to achieve desirable characteristics.

Two or more three-dimensional laminated structures may be joined to form a more complex structure, as in the two examples discussed below. Where two three-dimensional laminated structures are joined, the out-of-plane components of one or both three-dimensional laminated structures may be struts or other support-type members. The struts of one three-dimensional laminated structure may be joined to the struts or the planar surface of the other three-dimensional laminated structure.

Structures that may be made using the present method include reel flanges, appliance bases, pallets, furniture and packaging articles. Two particular structures and their components will now be described: a reel flange and an appliance base.

EXAMPLE 1

Reel Flange

Turning to the drawings, there is shown in FIG. **1** one embodiment of a three-dimensional paper laminate structure according to the present invention. The embodiment shown is a reel flange outer member **10**. The reel flange outer member **10** is one component of an assembled reel flange **58**, as will be described below. The reel flange outer member **10** is made according to a novel process also described in more detail below.

The reel flange outer member **10** has a substantially planar surface **12** and a plurality of struts **14** formed out-of-plane. In the illustrated embodiment, each strut **14** is connected to the planar surface **10** along a rigid fold line **16**. Each strut **14** has an additional fold which forms a tab **18** disposed in a predetermined angular relation to the planar surface **12** of the reel flange outer member **10** (ninety degrees in this example). As described below, the tabs **18** are to be bonded to a reel flange inner member **60** to form two of the four components of a completed reel flange **58**. Although the struts **14** are evenly distributed in a circular arrangement about the central axis of the reel flange outer member **10**, other arrangements are contemplated for other structures, depending on the overall shape of the structure and its desired characteristics.

The reel flange outer member **10** shown in FIG. **1** is made according to the following process. First, a plurality of paper sheets are die-cut into the desired planar shape. An important aspect of the present invention is that specific die-cuts are made around part of the periphery of those sections that will be formed or pressed out-of-plane. Next, the plurality of die-cut sheets are aligned and adhesive or hot melt is applied between the sheets. Third, the aligned sheets are placed in a punch and die like assembly. Before the adhesive or hot melt between the paper sheets sets, the punch and die assembly forms the out-of-plane members, in this case, the struts. Finally, the adhesive or hot melt is allowed to set, resulting in a rigid three-dimensional structure. Multiple three-dimensional structures may be joined to form even more complex structures such as the reel flange **58** shown in FIG. **7** or the appliance base to be described later.

FIG. **2** shows a single paper sheet **20** which has been die-cut in preparation for making a reel flange outer member **10**. Additional die-cuts **22** are made around part of the periphery of those sections that will be formed out-of-plane to make the struts **14**. In the illustrated embodiment two access holes **24** and a center hole **26** have been die-cut from the paper sheet **20**. The access holes **24** and the center hole **26** will accommodate guide pins during the forming process.

FIG. **3** shows a second paper sheet **30** die-cut to make the reel flange inner member **60** shown in FIG. **7**. A perforated circular die-cut **32** is made in the paper sheet **30** and a central hole **34** is die-cut inside the circular die-cut **32**. Partial die-cuts **36** radiate outwardly from the circular die-cut **32**. Tabs **38** defined by these partial die-cuts **28** will be pushed out-of-plane during the forming process. Access holes **40** may also be die-cut as needed.

Referring once again to FIG. **2**, after die-cutting, two or more die-cut paper sheets **20** are aligned and adhesive or hot melt is applied between the paper sheets **20**. Any number of paper sheets and any paper orientation may be used to achieve the desired thickness and performance characteristics. The aligned and bonded paper sheets **20** form a flat laminate **44** which is placed in a punch and die assembly **46** as shown in FIG. **4**. The punch and die like assembly **46** comprises a punch **48** and a die **50**. The access holes **24** and the center hole **26** in the flat laminate **44** accommodate the guide pins **52** and the center pin **53** in the die **50**.

FIG. **5** shows the punch and die assembly **46** after the flat laminate **44** has been mounted onto the die **50** and the punch **48** is beginning to lower. The guide pins **52** and center pin **53** hold the flat laminate **44** in position.

FIG. **6** is a cutaway view of the punch and die assembly **46** after the punch **48** has been lowered on top of the laminate **44**. At this point the laminate **44** is no longer flat because the punch **48** has formed the struts **14** out-of-plane. Springs **54** or other biasing means may be used to hold the laminate **44** in position while the punch **48** forms the struts **14** out-of-plane. An optional silicone pad **56** may be attached to the bottom surface of the punch **48** as shown to help provide a more uniform pressure over the entire surface area of laminate **44** while the adhesive or thermoplastic polymer sets.

Pressure from the punch and die assembly **46**, and optional heating and cooling, may be used to set the adhesive or hot melt (eg. thermoplastic polymer) between the paper sheets if necessary. The amount of time the punch **48** is in the fully downwardly position depends on the type of adhesive or thermoplastic polymer used. Cooling may also be necessary if a thermoplastic polymer is used. Once removed from the punch and die assembly **46**, the laminate **44** is now a finished reel flange outer member **10**, ready for assembly into a reel flange **58** and, ultimately, a reel **80** (FIG. **9**).

In making the reel flange inner member **60** shown in FIG. **7**, the process is repeated, beginning with making multiple die-cut paper sheets **30** as shown in FIG. **3**. Of course, a different punch and die like assembly is used to make the different three-dimensional shape of the reel flange inner member **60**.

FIG. **7** is an exploded view of a reel flange **58** comprising an outer member **10** (defined as the member away from the reel core) and an inner member **60**, each made according to the present invention. In addition to the outer member **10** and inner member **60**, the reel flange **58** comprises a reinforcing member **62** and a circumferential member **64**. The reinforcing member **62** is a by product of the process for making the inner member **60** and is formed from the perforated circular die-cuts **32** of FIG. **3**. The circumferential member **64** may be made from a short length of conventional paper tube.

The inner member **60** has a substantially planar surface **66** and tabs **68** formed by partial die-cuts **36** (FIG. **3**) and extending axially outward (away from the reel's cylindrical paper core—see FIG. **8**) from a fold line **70**. The tabs **68** have an approximately ninety degree bend to form tab end portions **72** which are substantially coplanar with the inner member planar surface **66**.

The assembly of the reel flange **58** will now be described. The outer member **10** and the inner member **60** are fitted together such that the outer member strut tabs **18** contact the inner member **60** and the inner member tabs **68** contact the outer member **10**. The circumferential member **64** is interposed between the inner member **60** and outer member **10** such that it contacts both the inner member **60** and the outer

member **10** around the circumferential edge of the reel flange **58**. Adhesive is applied to some or all of the contact areas of the assembled parts. The reinforcing member **62** is bonded to the outer member **10** to reinforce the hub area **74** of the inner member **10**. The assembled components thus make up a finished reel flange **58**.

FIG. **8** is an exploded view of a reel **80**, showing inside and outside views of a finished reel flange **58**. The two identical reel flanges **58** are glued onto opposite ends of a cylindrical paper core **82** to form the finished reel **80** shown in FIG. **9**. Preferably, the die-cut and molded reel flanges **58** are sized to force fit onto either end of the paper core **82**, and adhesive may also be used to secure the flanges **58** to the core **82**. No clamps are necessary to maintain the force fit of the flanges **58** onto the paper core **82** while the adhesive is setting.

EXAMPLE 2

Appliance Base

Turning to FIG. **10**, there is shown another product made from assembled three-dimensional paper laminate structures made according to the present invention. The product is an appliance base **110**, and like the reel flange shown in FIG. **7**, it comprises two three-dimensional laminated paper structures bonded together. As best shown in FIG. **11**, the two structures are a top laminated paper member **112** and a bottom laminated paper member **114**. Appliance bases are used to carry large appliances through the manufacturing and distribution stages.

The top member **112** of the appliance base **110** comprises a substantially planar rectangular surface **116**, a plurality of struts **118** formed out-of-plane with respect to the planar surface **116**, and downwardly extending side walls **119** formed along all four ends of the rectangular planar surface **116**. In the illustrated embodiment, each strut **118** is only about half the height of the side walls **119** and is connected to the planar surface **116** along a rigid fold line **120**. Each strut **118** has an additional fold which forms a tab **122** disposed in approximately parallel relationship to the planar surface **116**. As described more fully below, the struts **118** are perpendicular to and abut the struts **130** formed in the bottom member **114** of the assembled appliance base **110**.

The top member **112** further comprises corner recesses **124** for accommodating corner posts (not shown). The bottom surfaces **126** of the corner recesses **124** are bonded directly onto the planar surface **128** of the bottom member **114** so that cornerpost loading, as might occur when appliance packages are stacked on top of one another, is transferred directly through the base **110**. Preferably the bottom surfaces **126** are flat for full transfer of the cornerpost load. Because it is solid, the laminated paper material under the cornerpost does not crush under the cornerpost load as can happen with corrugated or other hollow structures.

The top member **112** further comprises optional floor leveler recess holes **127** to accommodate leveler screws (not shown) where they are used, such as with dishwashers. In the assembled base **110**, the floor leveler recess holes **127** are located at either end of the bottom member flanges **132** described in more detail below.

In the illustrated embodiment the top member **112** has three struts **118** on one side of the floor leveler recess holes **127** and a fourth strut **118** on the opposite side of the recess holes **127**. This configuration of struts is intended for illustrative purposes only; many other strut configuration are contemplated.

The bottom member **114**, like the top member **112**, comprises a substantially planar rectangular surface **128**, a plurality of struts **130** formed out-of-plane with respect to the planar surface **128**, and upwardly extending side walls **131** formed along all four ends of the rectangular planar surface **128**. In addition, the bottom member **114** has two flanges **132** located near opposing ends of the planar surface **128** facing upwardly toward the top member **112**.

As with the top member struts **118**, the height of the bottom member struts **130** is only about half the height of the bottom member side walls **131**. Each bottom member strut **130** is connected to the planar surface **128** along a rigid fold line **134**. Each bottom strut **130** has an additional fold which forms a tab **136** disposed in approximately parallel relationship to the bottom member planar surface **128**. The tabs **136** are to be bonded to opposing tabs **122** formed in the top member to form the assembled appliance base **110**. Unlike the struts **130**, the flanges **132** extend the full height of the side walls **131** and are to be bonded to the top member planar surface **116**.

To assemble the appliance base **110**, the top and bottom members are brought together until the opposing sets of tabs **122**, **136** meet. The tabs are bonded to each other to form a rigid structure. The upwardly extending bottom member flanges **132** are bonded to the facing planar surface **116** of the top member **112** directly beneath the support frame of the appliance. In production, the appliance is typically attached to the appliance base by screws. Bonding the flanges **132** to the top member **112** directly beneath the appliance increases the thickness of the appliance base **110** where the screws are inserted, thus providing increased screw holding resistance as well as providing support for the appliance.

The top member side walls **119** fit snugly within the bottom member side walls **131** and may be bonded thereto to provide shear resistance for inplane bending and side impact strength. The corners of the top member **126** fit inside the bottom member side walls **131**. Significantly, the bottom member struts **130** do not extend completely from one side wall to the opposite side wall. There is a narrow gap between the struts **130** and the side walls **131** to accommodate the top member side walls **119**.

In the assembled appliance base **110** the top member struts **118** and the bottom member struts **130** run perpendicular to each other the length of the appliance base **110** and act to strengthen and cushion the base **110** against side impacts in any of the four horizontal directions, as well as against vertical (compression) forces. The struts are intended to resist clamp loading forces exerted in either direction by clamp trucks.

Analogous to FIGS. **2** and **3**, FIGS. **12** and **13** show single paper sheets **140**, **150** which have been die-cut in preparation for making appliance base top and bottom members respectively. Die-cuts **142**, **152** are made around part of the periphery of those sections that will be formed out-of-plane to make the struts for the top and bottom members respectively.

In FIG. **12** a plurality of linear die-cuts **144** intersect at their approximate midpoint and each has a substantially equal angular displacement from adjacent diecuts. These die-cuts define substantially triangular-shaped sections that will be formed out-of-plane to create the floor leveler recess holes **127** in the laminated top member **112**. By die-cutting the paper sheets into the shape shown in FIG. **12**, side walls **119** and corner recesses **126** may be formed out-of-plane with a punch and die assembly in a process similar to that described above with respect to the reel flange.

As already noted, the paper sheet **150** shown in FIG. **13**, which together with other similarly-cut paper sheets forms the appliance base bottom member **114**, comprises partial die-cuts **152** around the perimeter of those sections to be formed out-of-plane to form the struts **130**. Additional partial die-cuts **154** are made in the paper sheet **150** around the periphery of sections to be formed out-of-plane to form the two flanges **132**. Die-cutting the paper sheets **150** into the shape shown in FIG. **13** allows the side walls **131** to be formed out-of-plane, leaving a substantially rectangular planar surface.

In a manner similar to that described above with respect to the reel flange components, after die-cutting the paper sheets of FIGS. **12** and **13**, multiple sheets are aligned and bonded together to form a flat laminate and, before the bonding material sets, formed into a three dimensional structure using a punch and die assembly.

In order to better understand how the top and bottom members **112**, **114** are joined together, attention is directed to FIGS. **14–17**. FIG. **14** is an enlarged top view of a section of the appliance base **110** of FIG. **10**. FIGS. **15**, **16** and **17** are cross-sections of FIG. **14** taken along lines **15—15**, **16—16** and **17—17** respectively. It can readily be seen in FIGS. **15** and **16** that the struts **118**, **130** are about half the height of the side walls **119**, **131**. As shown in FIG. **15**, the bottom surface **126** of the top member corner recess **124** lies flat against the bottom member **114**. As shown in FIG. **17**, the flanges **132** extend the full length from the bottom member **114** to the top member **112** where they are bonded thereto.

The preceding examples are illustrative only. The struts, for instance, can be designed for specific structural and performance characteristics by varying their shape and the angle formed by the struts and the planar surface.

FIGS. **18–22** show five possible shapes for struts formed out-of-plane, and highlight the design flexibility for three-dimensional laminated structures made according to the present invention. FIG. **18** shows the generally squared-off shape of the struts of the flange reel outer member **10** of FIG. **1** and the appliance base bottom member **114** of FIG. **11**. FIG. **19** shows an alternative design in which the struts **160** are curved. The strut in FIG. **18** is stiffer and more rigid than the strut in FIG. **19**. A load **90** applied in the direction of the arrows in FIGS. **18** and **19** will exhibit different resistance or spring constants on the shapes. FIG. **20** shows a third alternative strut shape in which the strut **160** forms a non-right angle with the planar surface **162**. FIG. **21** shows still another strut shape in which the strut **160** has a bend.

In FIGS. **18–21** the struts **160** form tabs **164** that are substantially parallel to the planar surface **162**. However the tabs need not be parallel to the planar surface and, as shown in FIG. **22**, the struts **160** need not form tabs at all.

The intent of the present invention is to provide three-dimensional structural/cushioning products from laminated sheets and a method of making such products. While the present invention has been described with respect to a reel flange and an appliance base, many other three-dimensional products may be made according to the present invention, including but not limited to furniture, packaging and packaging supports. Furthermore, while the present invention has been described in terms of reel flange members and appliance base members made from multiple sheets, it is anticipated that a three-dimensional laminated structure could be made from a single sheet of die-cut laminated material. In a still further modification of the present invention, instead of gluing multiple three-dimensional laminated structures together, such as the reel flange inner and outer members and the appliance base top and bottom members, different structures can be force fit to make a variety of products using both inside and outside force fits.

Thus an improved three-dimensional laminated structure has been provided. The three-dimensional laminated structure can be die-cut and molded into shapes more complex than those of laminated structures made by conventional methods. The three-dimensional laminated structure has superior strength compared to corrugated structures and many conventional laminated structures. The three-dimensional laminated structure can be designed with specific performance or geometric characteristics that are influenced by the laminate material, laminate fiber orientation, strut placement and strut shape.

Other modifications and alternative embodiments of the invention are contemplated which do not depart from the spirit and scope of the invention as defined by the foregoing teachings and appended claims. It is intended that the claims cover all such modifications that fall within their scope.

I claim as my invention:

1. A method of making a three-dimensional laminated structural component comprising:

a. cutting multiple layers of paper into a desired planar shape, including at least partially cutting through the periphery of sections that will later be formed out-of-plane;

b. aligning the multiple layers and the partially cut-through sections and applying a bonding material between the layers to form a laminate;

c. placing the aligned layers in a forming tool;

d. before the bonding material sets, forming out-of-plane said sections using the forming tool to make desired structural features connected to the planar surface of the multiple layers along fold lines; and

e. allowing the laminate to set until the fold lines and structural features are rigid, thereby obtaining a rigid three-dimensional laminated structural component.

2. The method of claim **1** wherein the bonding material is adhesive.

3. The method of claim **1** wherein the bonding material is a thermoplastic polymer, the aligned layers are preheated prior to forming in step (d), and the three-dimensional structural component is allowed to cool during step (e).

4. The method of claim **1** wherein the bonding material is a thermoplastic polymer, heat is applied to the forming tool to allow the polymer to flow and during step (d), and the forming tool is allowed to cool to set the polymer during step (e).

5. The method of claim **1** wherein the desired structural features include one or more struts shaped to provide a specific load resistance.

6. The method of claim **1** wherein some of the desired structural features are configured to receive in a close fitting relationship a portion of another three-dimensional structure.

7. The method of claim **1** wherein each layer of paper has a perimeter and a perimeter portion adjacent the perimeter, the cutting step includes cutting out sections from the perimeter portion of each layer of paper, and the forming step includes forming out-of-plane the perimeter portions of the aligned multiple layers to make a substantially continuous edge.

* * * * *

UNITED STATES PATENT AND TRADEMARK OFFICE

CERTIFICATE OF CORRECTION

PATENT NO. : 6,352,605 B1
DATED : March 5, 2002
INVENTOR(S) : Hunt

It is certified that error appears in the above-identified patent and that said Letters Patent is hereby corrected as shown below:

Title page,
Item [73], Assignee, should read as -- **The United States of America as represented by the Secretary of Agriculture** --.

Signed and Sealed this

First Day of October, 2002

Attest:

Attesting Officer

JAMES E. ROGAN
Director of the United States Patent and Trademark Office